State of Alaska

Department of Transportation and Public Facilities Southeast Region

January 20, 2015

The undersigned hereby certifies that this duplicated document is an exact and true copy of the original.

Cody Sutton

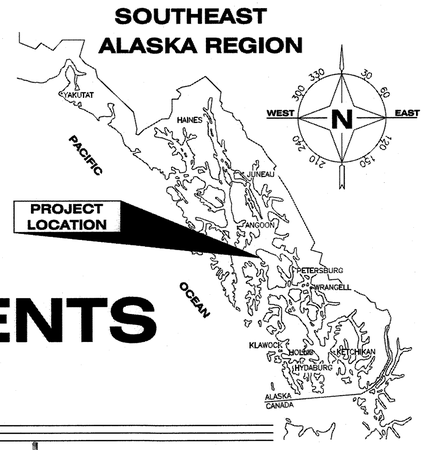

KAKE FERRY TERMINAL IMPROVEMENTS
KAKE, ALASKA

PROJECT No. 68238/0939007

AS-BUILT PLANS

CONTRACTOR : TAMICO INC.

PROJ. ENG. : VAL BEAN

BEGIN DATE : SEPTEMBER 6, 2015

END DATE : SEPTEMBER 28, 2016

TIDAL DATA	
HTL	+18.0'
MHW	+13.3'
MLLW	0.0'
ELW	−4.6'

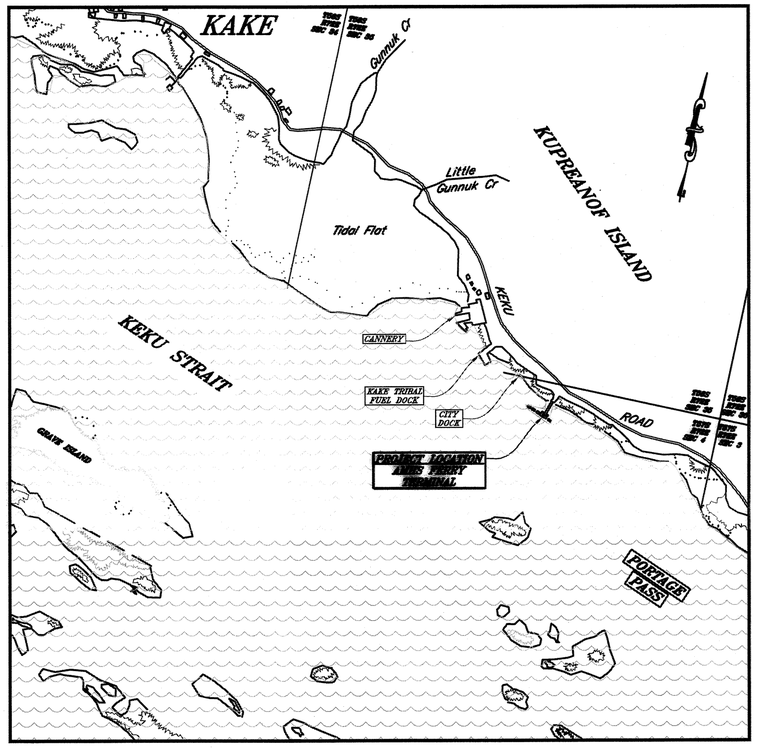

SITE MAP

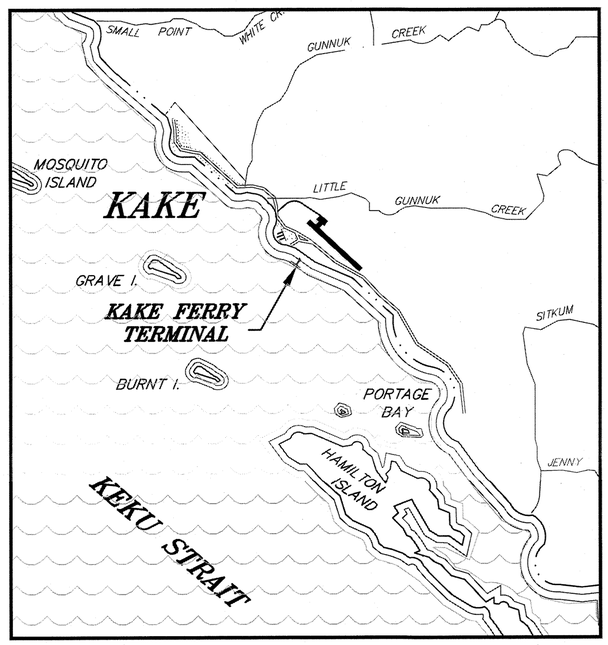

VICINITY MAP

Record Drawings have been reviewed by the Project Engineer, and represent to the best of my knowledge, the project as constructed.

PE ____ Date 4/22/16

SHEET INDEX

SHEET NO.	DESCRIPTION
01	TITLE SHEET
02	ESTIMATE OF QUANTITIES & GENERAL NOTES
03	SURVEY CONTROL
04	EXISTING SITE PLAN
05	NEW SITE PLAN
06	UPLANDS TYPICAL SECTIONS & LAYOUT POINTS
07	ABUTMENT LAYOUT
08	BRIDGE GATE
09–10	ABUTMENT DETAILS
11	BRIDGE PLAN & ELEVATION
12	BRIDGE TYPICAL SECTIONS & GENERAL NOTES
13	BRIDGE CROSS BEAM & ELASTOMERIC BEARING
14	BRIDGE BEARINGS
15	BRIDGE GIRDER FRAMING
16	BRIDGE GIRDER DETAILS
17	BRIDGE DECK
18	BRIDGE RAIL
19	FLOAT
20	INTERMEDIATE RAMP BASE
21	SEAWARD TRANSITION PLATE
22–23	FLOAT RESTRAINT COLLARS
24	FLOAT RESTRAINT DOLPHINS
25	PILE ANCHORS
26–28	ELECTRIC

PATH: Q:\KAE\68238\PLANSET\MF\01 – TITLE SHEET.DWG TAB:01

Thursday, May 29, 2014 10:45:08 AM

PLOT: PSPACE OR MSPACE: 1=1(F)

STATE OF ALASKA
DEPARTMENT OF TRANSPORTATION & PUBLIC FACILITIES
SOUTHEAST REGION

STATE OF ALASKA 49th DAVID H. LOWELL CE-12614 REGISTERED PROFESSIONAL ENGINEER 11/05/14

APPROVED: _____ 11-05-2014

REGIONAL PRE-CONSTRUCTION ENGINEER L. PAT CARROLL, P.E. DATE

APPROVED: _____ 11-05-2014

DIRECTOR OF DESIGN & CONSTRUCTION, SE REGION CHUCK CORREA, P.E. DATE

CERTIFIED TRUE & CORRECT AS-BUILT OF ACTUAL FIELD CONDITION:

CONSTRUCTION PROJECT MANAGER DATE

STATE	PROJECT DESIGNATION	YEAR	SHEET NO.	TOTAL SHEETS
ALASKA	68238/0939007	2014	01	28

ESTIMATE OF QUANTITIES

ITEM NO.	ITEM DESCRIPTION	PAY UNIT	QUANTITY
	BASIC BID		
202(1)	DEMOLITION AND REMOVAL	LUMP SUM	ALL REQ'D
202(13)	TERMINAL CLOSURE PRICE WITHHOLDING	CONTINGENT SUM	ALL REQ'D
203(3)	UNCLASSIFIED EXCAVATION	CUBIC YARD	~~800~~ 876.20
301(1)	AGGREGATE BASE COURSE, GRADING D-1	TON	~~65~~ 77.98
401(9)	COLD MIX ASPHALT CONCRETE, CO 3	TON	~~14~~ 0
501(1)	CONCRETE BRIDGE ABUTMENT	LUMP SUM	ALL REQ'D
504(1)	130' STEEL TRANSFER BRIDGE	LUMP SUM	ALL REQ'D
504(2)	STEEL BRIDGE FLOAT SYSTEM	LUMP SUM	ALL REQ'D
504(3)	3-PILE RESTRAINT DOLPHIN CAP (WR & ER)	EACH	2
504(4)	INTERMEDIATE RAMP MODIFICATIONS	LUMP SUM	ALL REQ'D
504(5)	BRIDGE GATE AND GUARDRAIL RESTORATION	LUMP SUM	ALL REQ'D
505(1)	30" DIA x 1/2" WALL PIPE PILE, FURNISHED	LINEAR FOOT	~~173~~ 161
505(2)	30" DIA x 1/2" WALL PIPE PILE, DRIVEN	EACH	2
505(3)	18" DIA x 1/2" WALL PIPE PILE, FURNISHED	LINEAR FOOT	~~369~~ 353.80
505(4)	18" DIA x 1/2" WALL PIPE PILE, DRIVEN	EACH	4
505(5)	150 LB PILE ANODE	EACH	8
518(1)	TENSION PILE ANCHORS	EACH	6
611(3)	RIPRAP, CLASS IV	LUMP SUM	ALL REQ'D
618(4)	SEEDING	LUMP SUM	ALL REQ'D
620(2)	TOPSOIL	LUMP SUM	ALL REQ'D
640(1)	MOBILIZATION AND DEMOBILIZATION	LUMP SUM	ALL REQ'D
640(4)	WORKER MEALS AND LODGING, OR PER DIEM	LUMP SUM	ALL REQ'D
641(1)	EROSION, SEDIMENT AND POLLUTION CONTROL ADMINISTRATION	LUMP SUM	ALL REQ'D
641(3)	TEMPORARY EROSION, SEDIMENT AND POLLUTION CONTROL	LUMP SUM	ALL REQ'D
641(4)	TEMPORARY EROSION, SEDIMENT AND POLLUTION CONTROL ADDITIVES	CONTINGENT SUM	ALL REQ'D
641(6)	WITHHOLDING	CONTINGENT SUM	ALL REQ'D
642(1)	CONSTRUCTION SURVEYING	LUMP SUM	ALL REQ'D
644(1)	FIELD OFFICE	LUMP SUM	ALL REQ'D
644(6)	VEHICLES	LUMP SUM	ALL REQ'D
646(1)	CPM SCHEDULING	LUMP SUM	ALL REQ'D
662(1)	ELECTRICAL SYSTEM	LUMP SUM	ALL REQ'D
662(1a)	ELECTRICAL SYSTEM MODIFICATIONS, CO 1	LUMP SUM	ALL REQ'D
662(1b)	ELECTRICAL SYSTEMS MODIFICATIONS, CO 2	LUMP SUM	ALL REQ'D

BASIS OF ESTIMATE

ITEM NO.	ITEM DESCRIPTION	EST. FACTOR
301(1)	AGGREGATE BASE COURSE, GRADING D-1	2.0 TONS/C.Y.
401(9)	COLD MIX ASPHALT CONCRETE	100 LBS/S.Y./INCH
611(3)	RIPRAP, CLASS IV	VOLUME = 2000 C.Y.

646(1a)	SCHEDULE, CO 3	LUMP SUM	ALL REQ'D

ABBREVIATIONS

AASHTO	AMERICAN ASSOC OF STATE HIGHWAY & TRANSPORTATION OFFICIALS
ABUT	ABUTMENT
ACZA	AMMONIACAL COPPER ZINC ARSENATE
AISC	AMERICAN INSTITUE OF STEEL CONSTRUCTION
ALUM	ALUMINUM
ASTM	AMERICAN SOCIETY FOR TESING & MATERIALS
ASSY	ASSEMBLY
ATS	ALASKA TIDELAND SURVEY
AWS	AMERICAN WELDING SOCIETY
BOP	BEGINNING OF PROJECT
BRG	BEARING
BTM	BOTTOM
BTWN	BETWEEN
C/C	CENTER TO CENTER
CJP	COMPLETE JOINT PENETRATION
CL	CENTERLINE
CLR	CLEAR
CNTRD	CENTERED
CONC	CONCRETE
CONT	CONTINUOUS
CTSK	COUNTERSINK
CU	CUBIC
CVN	CHARPY V-NOTCH
CY	CUBIC YARD
DBL	DOUBLE
DL	DEAD LOAD
EA	EACH
ECON HD	ECONOMY HEAD
ELEV	ELEVATION
EQ	EQUAL
FB	FLAT BAR
FS	FAR SIDE
GALV	GALVANIZED
GR	GRADE
HDG	HOT DIP GALVANIZE
HDPE	HIGH DENSITY POLYETHYLENE PLASTIC
HRZ	HORIZONTAL
HSS	HOLLOW STRUCTURAL SECTION
LF	LINEAR FEET
LR	LONG RADIUS
LS	LUMP SUM
MI	MALLEABLE IRON
NS	NON-SHRINKING, OR NEAR SIDE
OC	ON CENTER
OPP	OPPOSITE
PL	PLATE
PP	PIPE PILE
QTY	QUANTITY
R	RADIUS
REQ'D	REQUIRED
SR	SHORT RADIUS
SS	STAINLESS STEEL
STD	STANDARD
SY	SQUARE YARD
SYMM	SYMMETRIC
T&B	TOP AND BOTTOM
TYP	TYPICAL
UHMW	ULTRA HIGH MOLECULAR WEIGHT POLYETHYLENE PLASTIC
UON	UNLESS OTHERWISE NOTED
WP	WORK POINT
XS	EXTRA STRONG (PIPE)
XXS	DOUBLE EXTRA STRONG (PIPE)

GENERAL NOTES

DESIGN SPECIFICATIONS

PER CONTRACT DOCUMENTS FOR PROJECT NO. 68238. SEE ALSO GENERAL NOTES ON SHEET 12

DESIGN STANDARDS: AISC STEEL CONSTRUCTION MANUAL 14TH ED. LRFD

DESIGN VESSELS: AMHS M/V AURORA/LECONTE
AMHS M/V MALASPINA/MATANUSKA
AMHS M/V TAKU

MATERIALS

"BUY AMERICA" PROVISIONS APPLY

STEEL SHAPE & PLATES:

PLATES & SHAPES –	ASTM A36, UNLESS OTHERWISE NOTED
HOLLOW STRUCTURAL SECTIONS –	ASTM A500 GR B
HP –	ASTM A572 GR 50
PIPE –	ASTM A53 GR B
STAINLESS STEEL –	ASTM A276 TYPE 316
W –	ASTM A992, ASTM A709 GR 50
LADDER RUNGS –	ASTM A706, GR 60

PILING: STEEL – API 5L X52, OR ASTM A252 GR 3, OR ASTM A709 GR 50 FABRICATED TO API 2B

GRATING: STEEL WELDED-BAR TYPE, SERRATED TOP, THICKNESS & BAR SPACINGS AS NOTED ON PLANS.

PLASTIC: ULTRA HIGH MOLECULAR WEIGHT POLYETHYLENE PLASTIC ASTM D4020

FASTENERS: PER SPECS

CONCRETE: CAST-IN-PLACE: CLASS A-A
PRECAST: CLASS P

PROTECTIVE COATINGS

ALL STEEL, PILING, & WELDMENTS: GALVANIZED AFTER FABRICATION PER SPECS, UNLESS OTHERWISE NOTED

FIELD REPAIR OF EXISTING COATINGS: DAMAGED GALVANIZED AND PAINT COATINGS SHALL BE REPAIRED PER SPEC 504-3.03.

PILING

DIAMETER & WALL THICKNESS AS PER PILING TABLE & PLANS
DRIVING SHOES REQUIRED ON ALL PILES, APF 14001 OR EQUAL

WELDS

ALL WELDING SHALL BE PERFORMED BY CERTIFIED PERSONS IN ACCORDANCE WITH AWS D1.1 AND D1.5 AS APPLICABLE.

REFERENCE LEGEND

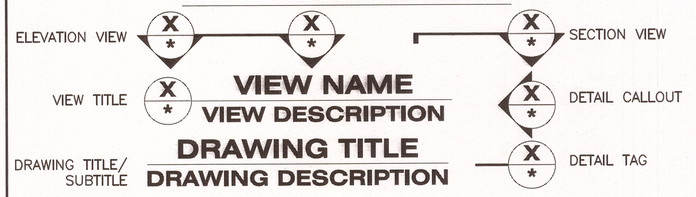

NOTES:
* SHEET NUMBER WHERE REFERENCE IS LOCATED WHEN ON A DIFFERENT SHEET OR DASH MARK WHEN REFERENCE IS ON THE SAME SHEET

PILE DATA

STRUCTURE	PILE	PILE SIZE	ULTIMATE CAPACITY (KIPS)		ELEVATION (FT)			EST. PILE LENGTH 18"Ø	EST. PILE LENGTH 30"Ø
			UPLIFT	BEARING	EST. MUDLINE	EST. TIP	CUTOFF		
WR	VERTICAL	30"ø x 1/2"	310	420	-28	-58	+31.0		89
	BATTER 1	18"ø x 1/2"	200	215	-27	-47	+35.5	87	
	BATTER 2		200	215	-28	-55	+35.5	95	
ER	VERTICAL	30"ø x 1/2"	310	420	-29	-53	+31.0		84
	BATTER 1	18"ø x 1/2"	200	215	-29	-55	+35.5	95	
	BATTER 2		200	215	-29	-52	+35.5	92	
						EST. TOTAL LENGTH (FT)		369	173

PILE DATA TABLE NOTES:

1. THE CONTRACTOR SHALL SUBMIT A PILE INSTALLATION PLAN IN ACCORDANCE WITH THE SPECIFICATIONS.
2. ALL PILE WORK SHALL BE PER SECTION 505. PILE INSTALLATION SHALL BE CONDUCTED WITH THE ENGINEER OR DEPARTMENT'S REPRESENTATIVE PRESENT.
3. DRIVE ALL PILES TO REFUSAL ON ROCK AND INSTALL TENSION PILE ANCHOR IN ACCORDANCE WITH THE PLANS AND SECTION 518 OF THE SPECIFICATIONS.
4. FOR THE PURPOSES OF ANCHORING, THE TEST LOAD = ULTIMATE UPLIFT CAPACITY IN THE PILE DATA TABLE. THE ANCHOR TEST LOAD SHALL IN NO CASE EXCEED 0.80 OF THE ULTIMATE STRENGTH OF THE ANCHOR BAR.
5. FOR THE PURPOSES OF ANCHORING, THE LOCK-OFF LOAD = 0.60 * ULTIMATE UPLIFT CAPACITY LISTED IN THE PILE DATA TABLE.
6. ALL PILES SHALL BE FITTED WITH OPEN-END DRIVING SHOES, APF 14001 OR EQUAL

Record Drawings have been reviewed by the Project Engineer, and represent to the best of my knowledge, the project as constructed.
PE (3) Date 4/22/16

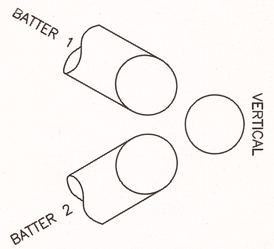

3 PILE DOLPHIN

DRAWING SCALES ARE FOR FULL-SIZE SHEETS. IF NO SCALE SHOWN, USE DIMENSIONS.

DESIGNED BY: D. LOWELL
STATE OF ALASKA – DAVID H. LOWELL – CE-12614 – 49th – REGISTERED PROFESSIONAL ENGINEER
11/05/2014
CHECKED BY: STAFF
DRAWN BY: STAFF

STATE OF ALASKA
DEPARTMENT OF TRANSPORTATION & PUBLIC FACILITIES
SOUTHEAST REGION

KAKE FERRY TERMINAL IMPROVEMENTS

ESTIMATE OF QUANTITIES & GENERAL NOTES

PATH: O:\KAE\68238\PLANSET\MF\02 – ESTIMATE OF QUANTITIES & GENERAL NOTES.DWG
TAB: 02 Friday, November 07, 2014 9:19:26 AM

REVISIONS NO.	DATE	DESCRIPTION	PROJECT DESIGNATION	YEAR	SHEET NO.	TOTAL SHEETS
			68238/0939007	2014	02	28

LOCAL SYSTEM COORDINATES				
Point #	Elevation	Northing	Easting	Description
33	26.21	501426.13	295994.97	GPS_BC2.5"_EMPS
49	30.90	501747.37	295915.69	GPS_ALCTRL2"_49
48	30.18	502178.18	295364.82	GPS_ALCTRL2"_48

NAD83 GEOGRAPHIC			
Point #	Northing	Easting	Description
33	N56° 57' 41.0574"	W133° 55' 15.0423"	GPS_BC2.5"_EMPS
49	N56° 57' 44.2198"	W133° 55' 16.4939"	GPS_ALCTRL2"_49
48	N56° 57' 48.4444"	W133° 55' 26.4592"	GPS_ALCTRL2"_48

All **SURVEY CONTROL** monuments in this table are provided strictly for survey control. Should any of them be destroyed during construction they **shall NOT** be replaced.

HORIZONTAL CONTROL

Horizontal Control for this project is based on the AK DOT/PF Kake Grid.

It relates to AKSPC Zone 1 NAD83 (92) through the following parameters:
Grid Scale = 0.99990134
Rotation = 0.0000
Translation about DOT/PF control point 49 as follows:
AKSPC Northing = 1873115.82 FT US
AKSPC Easting = 2635136.37 FT US
Local Northing = 501747.38 FT US
Local Easting = 295915.69 FT US

Project Specific Basis of Horizontal Control

33 - 2.5" Brass disk set in abutment at Kake ferry terminal flush with NW corner of abutment. Stamped "EMPS 1980".

48 - 2" Aluminum cap on rebar set 0.4ft from edge of pavement at the top of wood stairs opposite fuel farm at cannery. Stamped "AK DOT & PF 48"

49 - 2" Aluminum cap on rebar set 1.8ft from edge of pavement at NW side of apron to ferry terminal entrance. Stamped "AK DOT & PF 49"

VERTICAL CONTROL

The Vertical Datum for Kake Grid is Mean Lower Low Water = 0.00 ft based on National Ocean Service Benchmark Tidal Benchmark series 9451528. See http://www.co-ops.nos.noaa.gov/stations.html?type=Bench+Mark+Data+Sheets for details.

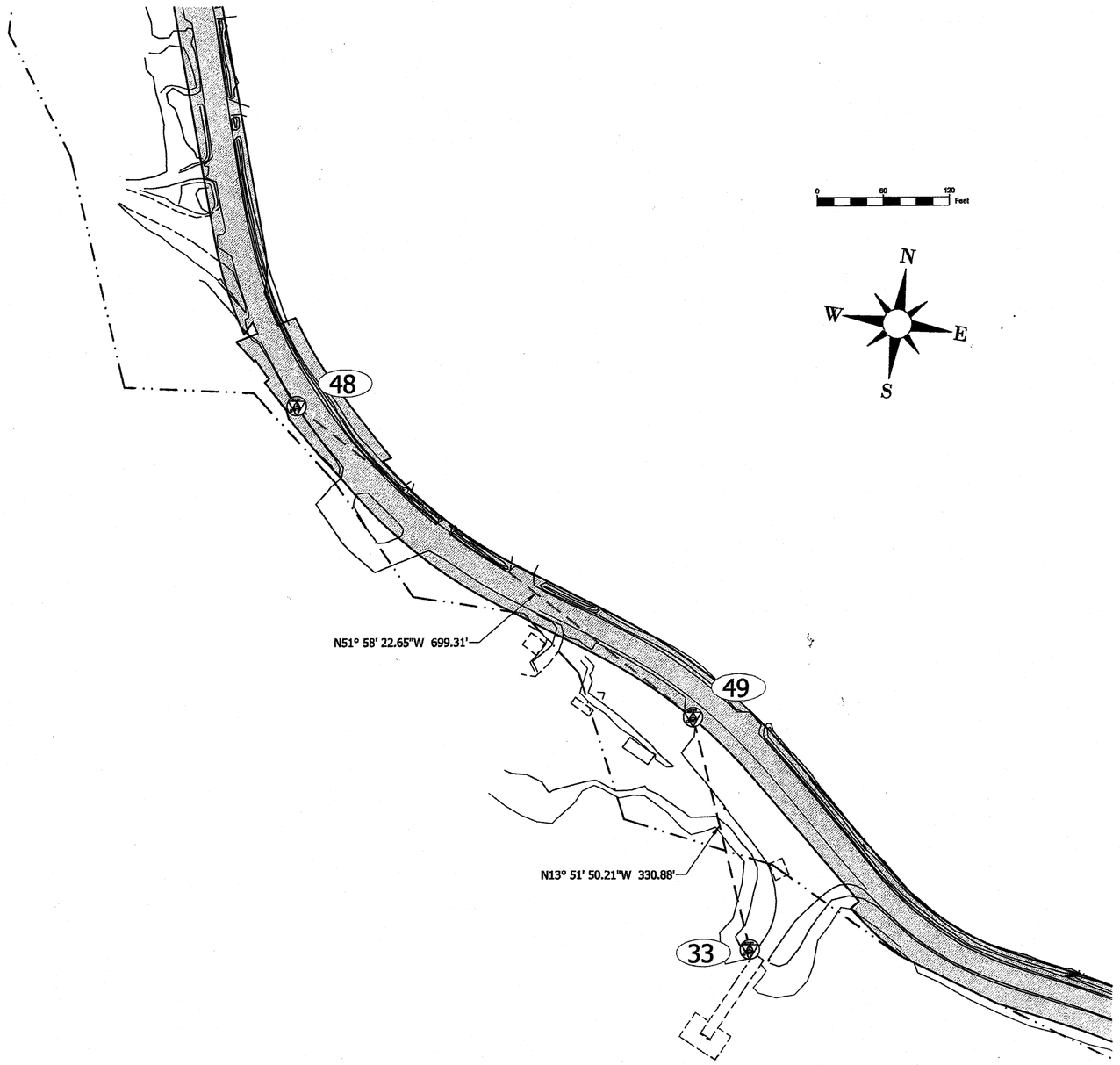

KAKE FERRY TERMINAL

Record Drawings have been reviewed by the Project Engineer, and represent to the best of my knowledge, the project as constructed.
PE ____ Date 4/22/16

DO NOT SCALE FROM THESE DRAWINGS USE DIMENSIONS

PATH: Q:\KAE\69539\SV\C3D\SOURCE DWGS\BASEMAP\68238_A2.DWG
IGNOTOV, DANIEL M (DOT)
TAB: A2 Friday, September 05, 2014 9:49:

ADDENDUM NUMBER

ATTACHMENT NUMBER

RECORD OF REVISIONS		
No.	DATE	DESCRIPTION

MONUMENT NOTES:

1. If any pair of control points disagrees from published value by more than 1:10,000 horizontally or vertically then a third network point must be tied to ascertain which point is in error or has been disturbed.

2. Whether listed or not, all monuments, property markers, or accessories that will be disturbed or buried shall be referenced prior to being disturbed, and re-established in their original position and a record of monument form in accordance with A.S.34.65.040 shall be submitted to the construction engineer for review prior to recording. Coordinate values listed are for informational purposes and should be used to reset monuments only as a last resort.

CHECKED BY: DMI

STATE OF ALASKA 49TH Daniel Magnotov No. 11296 REGISTERED PROFESSIONAL LAND SURVEYOR 9.5.14

DESIGNED BY: DMI

DRAWN BY: DMI

STATE OF ALASKA
DEPARTMENT OF TRANSPORTATION & PUBLIC FACILITIES
SOUTHEAST REGION

KAKE FERRY TERMINAL IMPROVEMENTS

SURVEY CONTROL

PROJECT DESIGNATION	
68238/0939007	
STATE	YEAR
ALASKA	2014
SHEET NUMBER	TOTAL SHEETS
3	28

TO KAKE

ROW

CP#49

DISTURBED 11/1/15

NEW 8" GATE VALVE @ STA: 39+90 TO SERVICE NEW FERRY TERMINAL STRUCTURE

8"

26"

M.H. INV. = -9.1' FT. FROM TOP OF LID

NEW WATERLINE 10/20/15

EXISTING SEWER LINE ROW

KEKU ROAD

INV. = -6.3' FROM TOP OF LID

M.H.

TO HARBOR

USS 3852
PORTION LOT 5
STATE OF ALASKA
DOT&PF

USS 3852
PORTION LOT 5
STATE OF ALASKA
DOT&PF

PAVED PARKING & STAGING AREA

EXISTING TIMBER WAITING SHELTER

LIGHT POLE 4.0' 6.5'

A.T.S. 903
TRACT A
CITY OF KAKE

EXISTING RIPRAP SLOPE PROTECTION

EXISTING ELECTRICAL UTILITY CABINET, SEE NOTE 1

CP#33

EXISTING PAVED APPROACH, APPROX. 820 S.F. **(TO REMOVE)**

REMOVE W/EXISTING ABUTMENT

EXISTING INTERMEDIATE RAMP **(TO REMOVE, SALVAGE & REINSTALL)**

EXISTING FLOAT RESTRAINT STRUCTURE **(TO REMOVE)**

EXISTING MOORING STRUCTURES (TO REMAIN)

LIMITS OF SURVEY INFORMATION: SEAWARD CONTOURS BASED ON OVERLAY OF '94 AS-BUILTS

EXISTING RIPRAP SLOPE PROTECTION

EXISTING POLE WITH LUMINAIRE & POWER UTILITY POLE, SEE NOTE 1

35' EXISTING GUARDRAIL EACH SIDE OF PAVED APPROACH **(TO REMOVE)**

EXISTING CONCRETE BRIDGE ABUTMENT & TIE-BACK ANCHORS **(TO REMOVE)**

EXISTING STEEL TRANSFER BRIDGE **(TO REMOVE)**

EXISTING STEEL FLEXIFLOAT PONTOONS **(TO REMOVE)**

EXISTING FLOAT RESTRAINT STRUCTURE **(TO REMOVE)**

EXISTING MOORING STRUCTURES (TO REMAIN)

A.T.S. 903
TRACT B
STATE OF ALASKA
DOT&PF

WR ER

W5 W4 W3 W2 W1 E1 E2 E3

FENDER LINE

M/V MATANUSKA M/V TAKU M/V LECONTE M/V LECONTE

KEKU STRAIT

30' 0 30' 60'
GRAPHIC SCALE (FT)

Record Drawings have been reviewed by the Project Engineer, and represent to the best of my knowledge, the project as constructed.
PE _____ Date 4/22/16

GENERAL NOTES

1. EXISTING UNDERGROUND UTILITIES SHOWN ON THE PLANS ARE APPROXIMATE AND MUST BE FIELD VERIFIED. CONTACT THE RESPECTIVE LOCAL UTILITY OFFICE FOR FIELD LOCATES PRIOR TO EXCAVATION WORK PER SECTION 662.

LEGEND

- EXISTING PROPERTY LINE
- ROW — RIGHT OF WAY LINE
- OHE — OVERHEAD ELECTRIC POWER LINE
- EXISTING ASPHALT PAVEMENT
- EXISTING GRASSY LAWN AREA

DRAWING SCALES ARE FOR FULL-SIZE SHEETS. IF NO SCALE SHOWN, USE DIMENSIONS.

DESIGNED BY: J. OSBURN

STATE OF ALASKA · 49th · JOEL D. OSBURN · CE-11014 · REGISTERED PROFESSIONAL ENGINEER

11/05/2014

CHECKED BY: STAFF

DRAWN BY: STAFF

STATE OF ALASKA
DEPARTMENT OF TRANSPORTATION & PUBLIC FACILITIES
SOUTHEAST REGION

KAKE FERRY TERMINAL IMPROVEMENTS

EXISTING SITE PLAN

PATH: Q:\KAE\68238\PLANSET\MF\04 – EXISTING SITE PLAN.DWG
TAB: 04 Wednesday, November 05, 2014 12:14:24 PM

REVISIONS NO.	DATE	DESCRIPTION	PROJECT DESIGNATION	YEAR	SHEET NO.	TOTAL SHEETS
			68238/0939007	2014	04	28

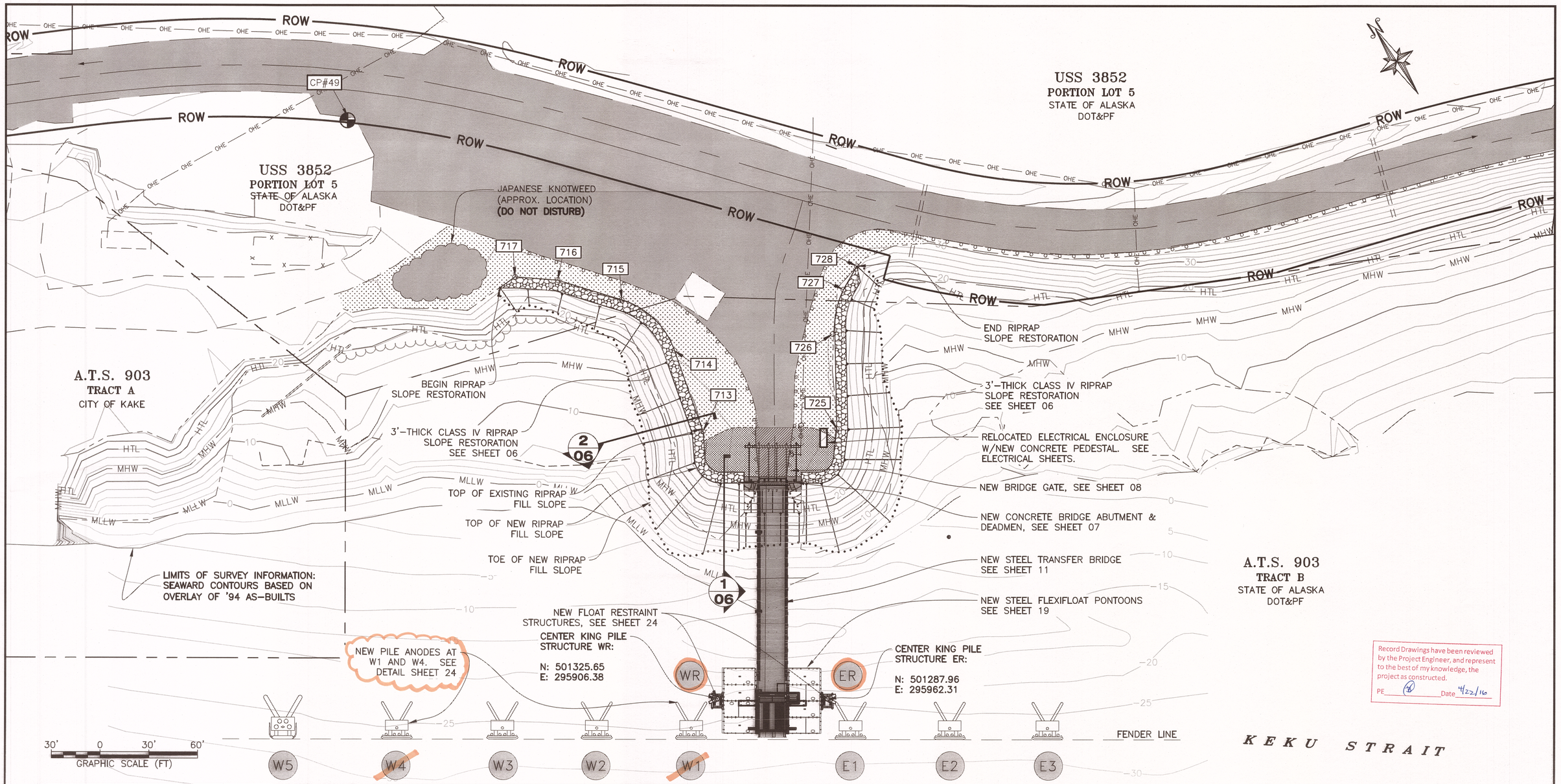

Record Drawings have been reviewed by the Project Engineer, and represent to the best of my knowledge, the project as constructed.
PE _____ Date 4/22/16

CONSTRUCTION LIMITATIONS AND SEQUENCING NOTES:

1. CONSTRUCTION PHASING PLAN – PROVIDE A DETAILED CONSTRUCTION PHASING PLAN PRIOR TO STARTING ANY FIELD WORK. THE PHASING PLAN SHALL DESCRIBE THE SEQUENCE AND METHODS FOR REMOVAL AND INSTALLATION OF NEW MOORING STRUCTURES. NO WORK MAY COMMENCE ON SITE UNTIL THE CONSTRUCTION PHASING PLAN HAS BEEN APPROVED BY THE ENGINEER.
2. ENVIRONMENTAL COMMITTMENTS – REFER TO APPENDIX B AND SECTION 641 OF THE SPECIFICATIONS FOR ENVIRONMENTAL WORK RESTRICTIONS.
3. WORK TIMES – SEQUENCE ALL WORK TO MAINTAIN UNIMPEDED USE OF THE FACILITIES BY SCHEDULED FERRY VESSELS. COORDINATE WITH AMHS FOR THE LATEST FERRY SCHEDULES AND UPDATES WHEN SCHEDULING CONSTRUCTION ACTIVITIES.
4. AUTHORIZED TERMINAL CLOSURES – SEQUENCE ALL DEMOLITION AND CONSTRUCTION TO MAINTAIN FERRY SERVICE IN ACCORDANCE WITH PUBLISHED FERRY SCHEDULES, EXCEPT DURING AUTHORIZED TERMINAL CLOSURES. THE CONTRACTOR IS AUTHORIZED TO CLOSE THE TERMINAL TO FERRY AND LOCAL USE BASED ON THE SCHEDULE SET FORTH IN SPECIFICATIONS SECTION 202. THE CONTRACTOR IS ALLOWED EXCLUSIVE USE OF THE TERMINAL SITE FOR EXECUTION OF THE WORK DURING THIS PERIOD OF TIME.
5. UNAUTHORIZED TERMINAL CLOSURES – FOR EACH OCCURRENCE THAT A SCHEDULED AMHS VESSEL IS PREVENTED FROM USING THE FACILITY AS A RESULT OF THE CONTRACTOR'S OPERATIONS, A TERMINAL CLOSURE PRICE WITHHOLDING (DEDUCTION IN CONTRACT PAYMENTS) WILL BE ASSESSED UNDER BID ITEM 202(13).
6. CLEAR ACCESS TO BERTH – PRIOR TO SCHEDULED AMHS FERRY ARRIVALS, THE CONTRACTOR'S EQUIPMENT AND MATERIALS SHALL BE MOVED OR STORED IN LOCATIONS THAT WILL NOT HINDER SAFE VESSEL ACCESS AND BERTHING OR TRANSFER OF VEHICLES AND PEDESTRIANS.

DRAWING SCALES ARE FOR FULL-SIZE SHEETS. IF NO SCALE SHOWN, USE DIMENSIONS.

DESIGNED BY: J. OSBURN
STATE OF ALASKA · 49th · JOEL D. OSBURN · CE-11014 · REGISTERED PROFESSIONAL ENGINEER
11/05/2014
CHECKED BY: STAFF
DRAWN BY: STAFF

STATE OF ALASKA
DEPARTMENT OF TRANSPORTATION
& PUBLIC FACILITIES
SOUTHEAST REGION

KAKE FERRY TERMINAL IMPROVEMENTS

NEW SITE PLAN

PATH: Q:\KAE\68238\PLANSET\MF\05 – NEW SITE PLAN.DWG
TAB: 05 Wednesday, November 05, 2014 12:14:52 PM

REVISIONS NO.	DATE	DESCRIPTION	PROJECT DESIGNATION	YEAR	SHEET NO.	TOTAL SHEETS
			68238/0939007	2014	05	28

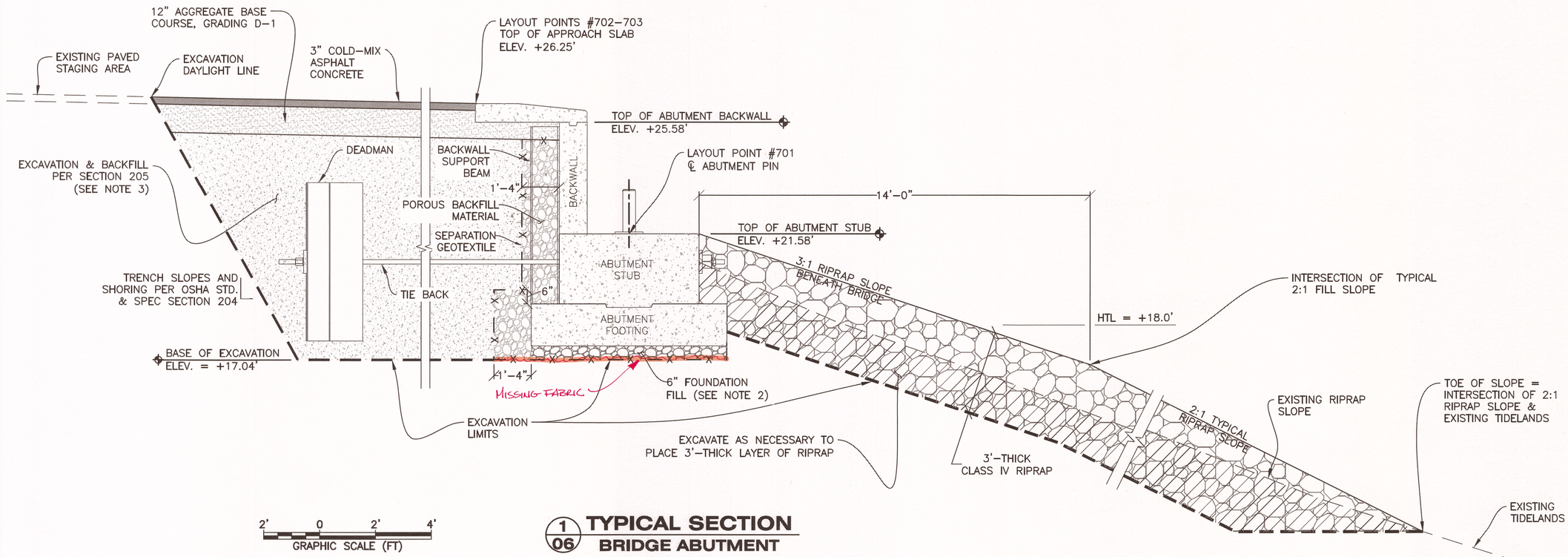

1/06 TYPICAL SECTION
BRIDGE ABUTMENT
(BRIDGE & GATE NOT SHOWN FOR CLARITY)

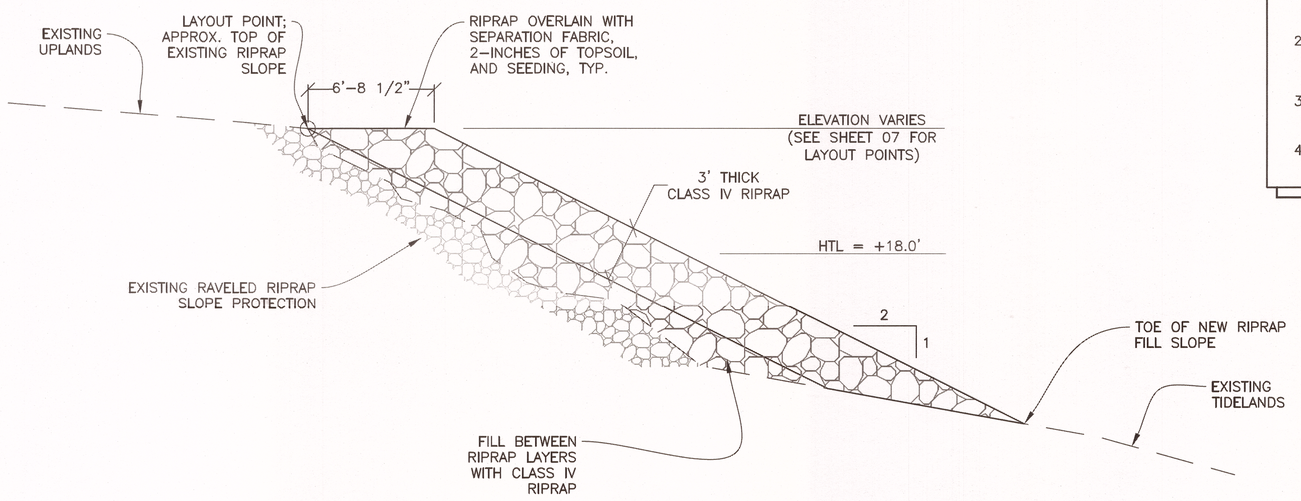

2/06 TYPICAL SECTION
RIPRAP SLOPE RESTORATION

NOTES:

1. REFER TO SITE LAYOUT PLAN FOR SURFACE GRADING INFORMATION. PAVEMENT SLOPE VARIES DEPENDING ON EDGE LAYOUT POINTS.
2. INSTALL ABUTMENT FOOTING ON LEVEL, COMPACT FOUNDATION FILL IN ACCORDANCE WITH 205-3.02. PLACE BACKFILL MATERIALS BEHIND ABUTMENT, AROUND DEADMEN, AND BENEATH TIE BACKS IN ACCORDANCE WITH 205-3.03. COMPACT FOUNDATION FILL AND BACKFILL MATERIALS TO MEET 203-3.05.
3. UNCLASSIFIED EXCAVATION MEETING THE REQUIREMENTS OF SELECTED MATERIAL, TYPE C SHALL BE RE-USED AS BACKFILL IN THE BRIDGE ABUTMENT AREA, AS DEPICTED ON THESE TYPICAL SECTIONS.
4. INORGANIC DELETERIOUS MATERIALS (CONCRETE, STEEL, ASPHALT, ETC.) REMOVED FROM THE PROJECT SHALL BECOME THE PROPERTY OF THE CONTRACTOR AND DISPOSED OF AT AN APPROVED OFF-SITE LOCATION.

Record Drawings have been reviewed by the Project Engineer, and represent to the best of my knowledge, the project as constructed.
PE ℄ Date 4/22/16

DRAWING SCALES ARE FOR FULL-SIZE SHEETS. IF NO SCALE SHOWN, USE DIMENSIONS.

DESIGNED BY: J. OSBURN
STATE OF ALASKA · 49th · JOEL D. OSBURN · CE-11014 · REGISTERED PROFESSIONAL ENGINEER
11/05/2014
CHECKED BY: STAFF
DRAWN BY: STAFF

STATE OF ALASKA
DEPARTMENT OF TRANSPORTATION & PUBLIC FACILITIES
SOUTHEAST REGION

KAKE FERRY TERMINAL IMPROVEMENTS

UPLANDS TYPICAL SECTIONS

PATH: Q:\KAE\68238\PLANSET\MF\06 - UPLANDS TYPICAL SECTIONS & LAYOUT POINTS.DWG
TAB: 06 Wednesday, November 05, 2014 12:15:28 PM

REVISIONS NO.	DATE	DESCRIPTION	PROJECT DESIGNATION	YEAR	SHEET NO.	TOTAL SHEETS
			68238/0939007	2014	06	28

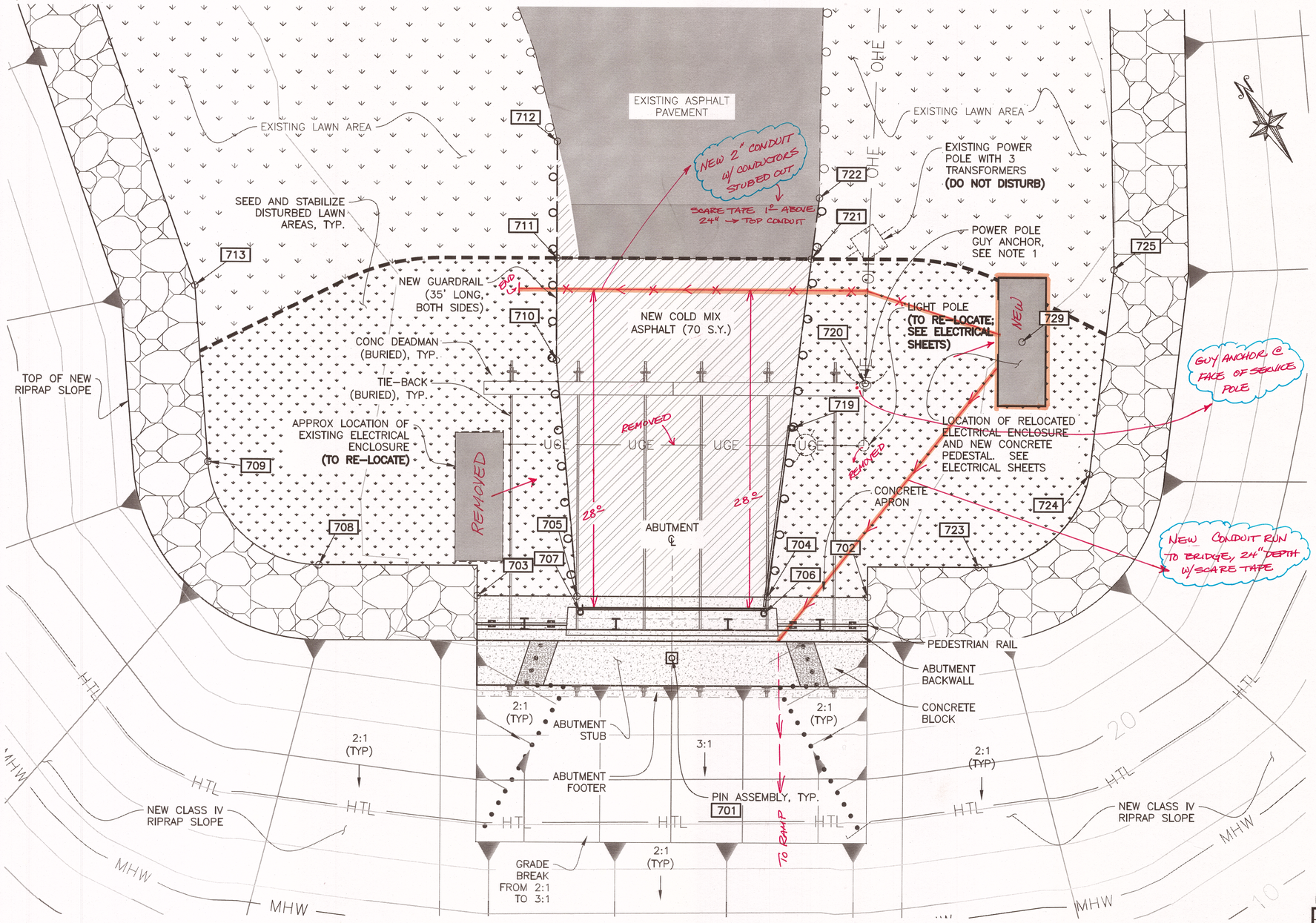

LAYOUT POINT TABLE

PNT #	NORTH	EAST	ELEV	DESC
701	501415.29	296007.45	21.58	ABUTMENT PIN
702	501410.07	296025.03	26.25	APPROACH SLAB
703	501429.64	295996.01	26.25	APPROACH SLAB
704	501414.81	296018.00	26.25	EDGE PAVEMENT_GUARDRAIL
705	501424.34	296003.87	26.25	EDGE PAVEMENT_GUARDRAIL
706	501414.02	296016.49	0.00	BRIDGE GATE HINGE POST
707	501423.25	296002.91	0.00	BRIDGE GATE END POST 1
708	501438.41	295987.85	25.80	RIPRAP PC_R=10'
709	501453.00	295982.64	25.50	RIPRAP PT
710	501443.20	296013.61	27.00	GUARDRAIL/PAVEMENT EDGE
711	501450.78	296018.72	27.15	MATCH EXISTING PAVEMENT
712	501459.47	296024.58	27.35	MATCH GUARDRAIL
713	501466.77	295990.41	25.40	RIPRAP PT
714	501517.69	296003.62	26.00	RIPRAP PC_R=50'
715	501561.75	295994.05	26.50	RIPRAP PT
716	501593.72	295968.11	26.00	RIPRAP PT
717	501610.03	295947.47	26.50	RIPRAP PT
719	501426.82	296028.07	26.77	BRIDGE GATE END POST 2
720	501426.09	296035.47	0.00	PP ANCHOR
721	501438.03	296037.63	26.90	MATCH EXISTING PAVEMENT
722	501442.20	296041.29	27.00	MATCH GUARDRAIL
723	501406.75	296034.80	25.90	RIPRAP PC_R=10'
724	501408.16	296047.65	25.80	RIPRAP PT
725	501422.19	296059.63	25.90	RIPRAP PT
726	501474.28	296093.13	26.20	RIPRAP PC_R=50'
727	501492.13	296113.19	26.00	RIPRAP PT
728	501498.15	296125.49	26.50	RIPRAP PT
729	501421.37	296049.21	0.00	ELECTRICAL ENCLOSURE

NOTES:

1. TEMPORARILY BRACE POWER POLE DURING ABUTMENT EXCAVATION. REINSTALL GUY ANCHOR DURING ABUTMENT BACKFILL.
2. BRIDGE GATE IS REFERENCED TO CENTER OF POST.
3. GUARDRAIL IS REFERENCED TO FACE OF RAIL.
4. SEE TYPICAL SECTION SHEETS FOR ADDITIONAL LAYOUT REFERENCE INFORMATION.
5. COORDINATE INSTALLATION SEQUENCING OF GUARDRAIL, BRIDGE GATE, ABUTMENT, TIEBACKS, DEADMAN & ELECTRICAL UTILITIES.

LEGEND

- OHE — OVERHEAD ELECTRIC POWER LINE
- UGE — UNDERGROUND ELECTRIC POWER LINE
- EXISTING ASPHALT PAVEMENT
- NEW COLD MIX ASPHALT PAVEMENT
- EXISTING GRASSY LAWN AREA
- NEW STABILIZED LAWN AREA
- LIMITS OF FILL
- LIMITS OF CUT
- ### LAYOUT POINT NUMBERS

PLAN
BRIDGE ABUTMENT

*TRANSFER BRIDGE NOT SHOWN FOR CLARITY

5' 0 5' 10'
GRAPHIC SCALE (FT)

Record Drawings have been reviewed by the Project Engineer, and represent to the best of my knowledge, the project as constructed.
PE ____ Date 4/22/16

DRAWING SCALES ARE FOR FULL-SIZE SHEETS. IF NO SCALE SHOWN, USE DIMENSIONS.

DESIGNED BY: J. OSBURN
CHECKED BY: STAFF
DRAWN BY: STAFF

STATE OF ALASKA 49th JOEL D. OSBURN CE-11014 REGISTERED PROFESSIONAL ENGINEER
11/05/2014

STATE OF ALASKA
DEPARTMENT OF TRANSPORTATION & PUBLIC FACILITIES
SOUTHEAST REGION

KAKE FERRY TERMINAL IMPROVEMENTS

ABUTMENT LAYOUT

PATH: O:\KAE\68238\PLANSET\MF\07 – ABUTMENT LAYOUT.DWG
TAB: 07 Wednesday, November 05, 2014 12:16:05 PM

REVISIONS NO.	DATE	DESCRIPTION	PROJECT DESIGNATION	YEAR	SHEET NO.	TOTAL SHEETS
			68238/0939007	2014	07	28

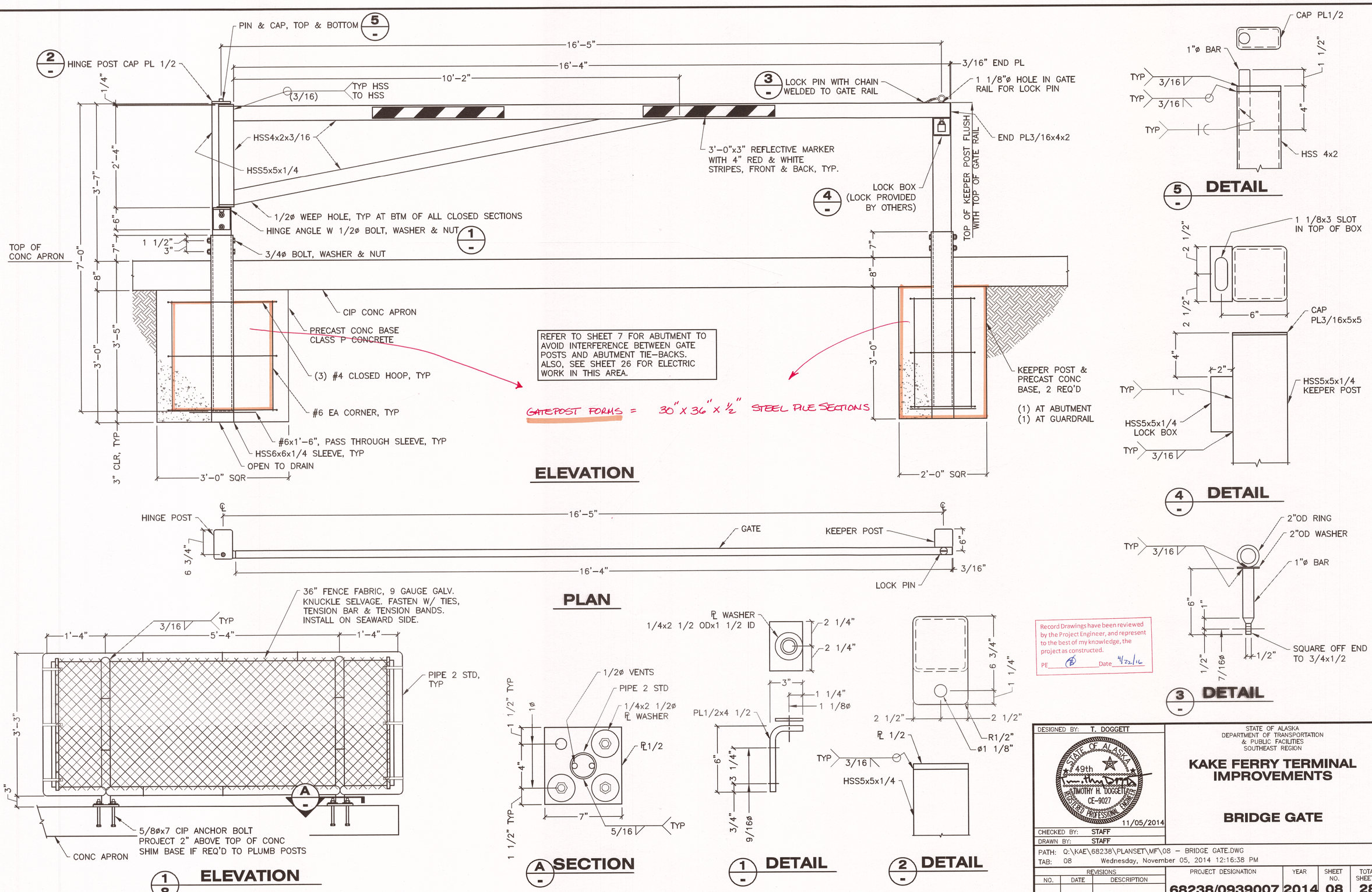

DESIGNED BY:	T. DOGGETT
CHECKED BY:	STAFF
DRAWN BY:	STAFF
PATH:	Q:\KAE\68238\PLANSET\MF\08 – BRIDGE GATE.DWG
TAB:	08 Wednesday, November 05, 2014 12:16:38 PM

STATE OF ALASKA
49th
TIMOTHY H. DOGGETT
CE-9027
REGISTERED PROFESSIONAL ENGINEER
11/05/2014

STATE OF ALASKA
DEPARTMENT OF TRANSPORTATION & PUBLIC FACILITIES
SOUTHEAST REGION

KAKE FERRY TERMINAL IMPROVEMENTS

BRIDGE GATE

REVISIONS NO.	DATE	DESCRIPTION	PROJECT DESIGNATION	YEAR	SHEET NO.	TOTAL SHEETS
			68238/0939007	2014	08	28

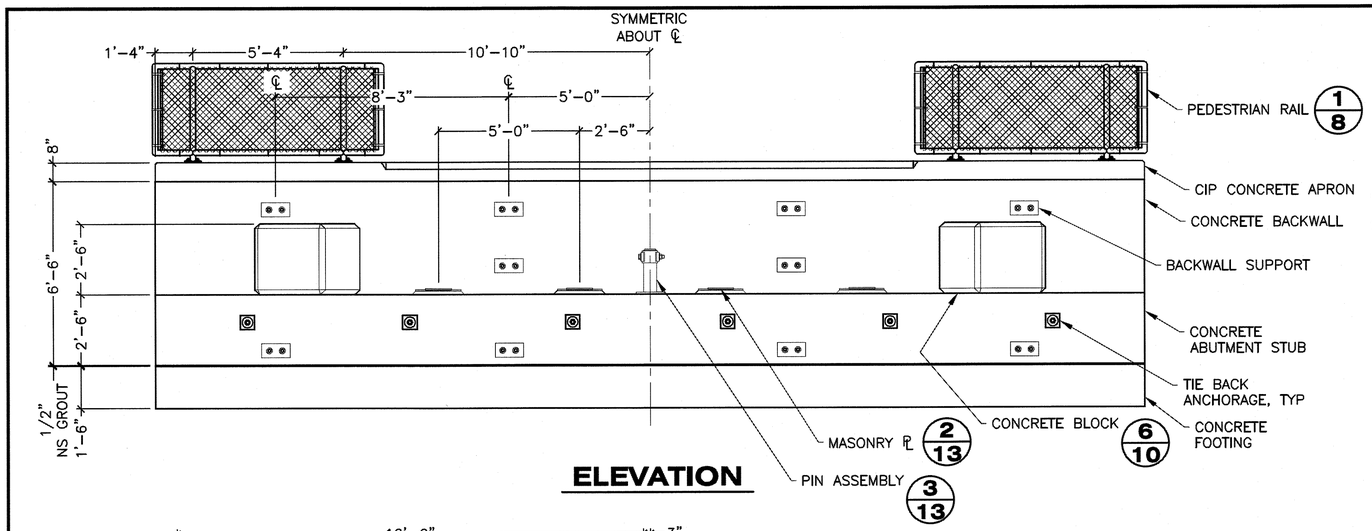

ELEVATION

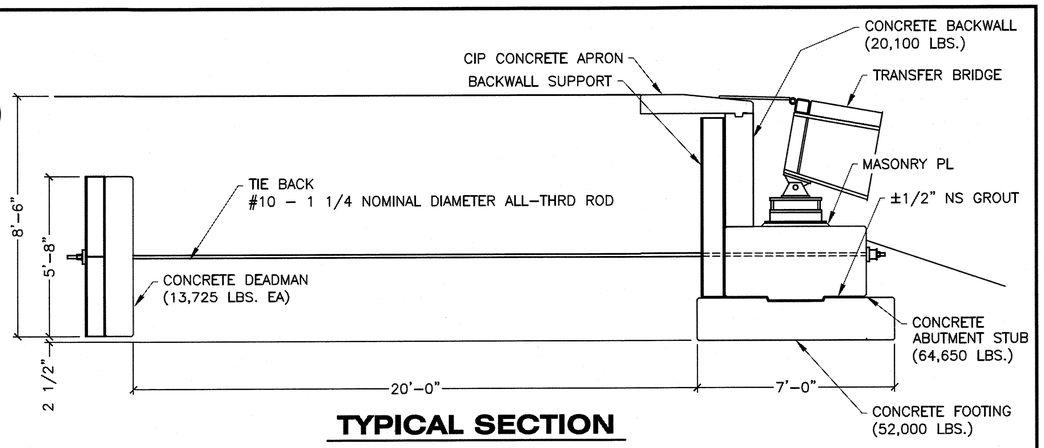

TYPICAL SECTION

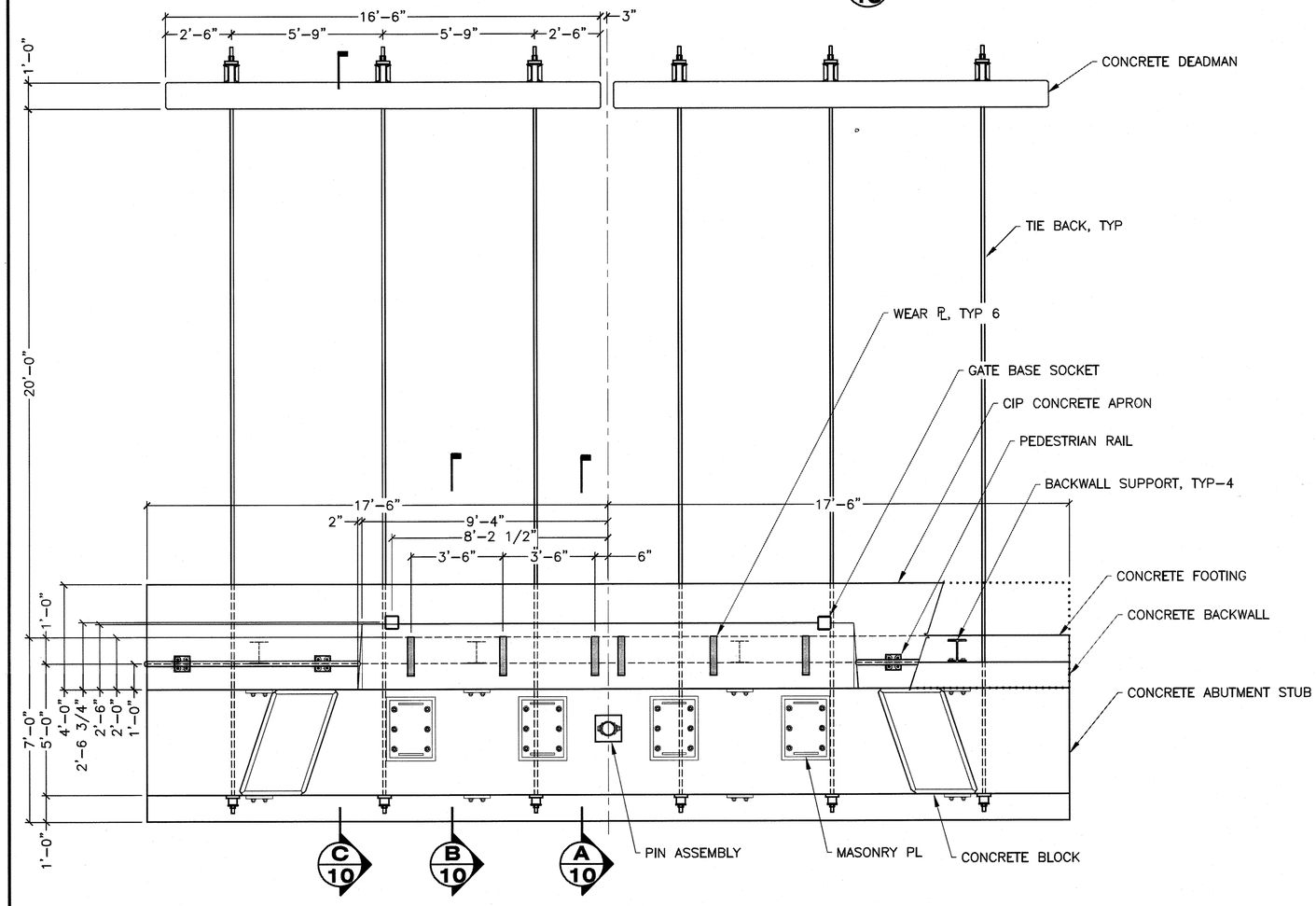

PLAN

GENERAL NOTES:

1. ABUTMENT STUB, FOOTING, BACKWALL, BLOCK AND DEADMAN SHALL BE PRECAST COMPONENTS OF CLASS P CONCRETE WITH SPECIFIED COMPRESSIVE STRENGTH OF 5,000 PSI. APRON SHALL BE CAST–IN–PLACE USING CLASS A–A CONCRETE.
2. TOP SURFACE OF APRON SHALL BE NON–SKID, BROOM FINISH. ALL OTHER COMPONENTS ARE ORDINARY FINISH. CHAMFER ALL EDGES 3/4"x3/4", UON.
3. ALL REINFORCING STEEL SHALL BE ASTM 615 GR60 AND HOT DIP GALVANIZED TO ASTM A767 CLASS I AFTER FABRICATION. CONCRETE COVER TO REINFORCEMENT IS 3" UNLESS OTHERWISE NOTED. MINIMUM BEND DIAMETER AND STANDARD HOOK DIMENSIONS PER ACI 318. REINFORCEMENT THAT IS JOINED BY WELDING SHALL BE ASTM A706 GR60 AND WELDED IN ACCORDANCE WITH AWS D1.9.
4. TIE BACK RODS ARE GRADE 75 ALL–THREAD BARS MEETING ASTM A615.
5. TIE BACK RODS, HARDWARE, STEEL SHAPES, LIFTING DEVICES, AND EMBEDDED ITEMS SHALL BE HOT DIP GALVANIZED TO ASTM A123 OR A153, AS APPROPRIATE.
6. SLEEVES FOR PRE–FORMED BOLT HOLES ARE PVC PIPE, SCH 40.
7. LIFTING DEVICES SHALL BE DESIGNED BY THE MANUFACTURER'S REGISTERED PROFESSIONAL ENGINEER FOR REVIEW BY THE DEPARTMENT. LIFTING DEVICES THAT ARE NOT EXPOSED IN THE COMPLETED STRUCTURE MAY REMAIN, OTHERS SHALL BE RECESSED AT LEAST 2" AND COVERED WITH EPOXY GROUT.
8. SHIM ABUTMENT STUB ON FOOTING USING PLASTIC OR RUBBER SHIMS AND BOND STUB TO FOOTING WITH NON–SHRINK GROUT.
9. MEMBER WEIGHTS ASSUME CONCRETE DENSITY OF 145 PCF.

REINFORCEMENT SCHEDULE

ID	SIZE	QTY	TYPE		DIMENSION (INCHES)					
		(EA)		A	B	C	D	E	F	G
A301	#3	96	S3	4.0	6.0	22.0	6.0			4.0
A401	#4	35	T2	4.5	6.0	42.0	6.0	42.0		4.5
A402	#4	70	T2	4.5	40.0	24.0	40.0	24.0		4.5
A403	#4	70	T2	4.5	52.0	12.0	52.0	12.0		4.5
A404	#4	1	T2	4.5	18.0	18.0	18.0	18.0		4.5

ALL DIMENSIONS ARE OUT–TO–OUT OF BAR.

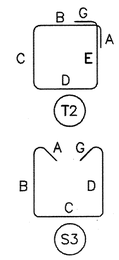

DRAWING SCALES ARE FOR FULL-SIZE SHEETS. IF NO SCALE SHOWN, USE DIMENSIONS.

Record Drawings have been reviewed by the Project Engineer, and represent to the best of my knowledge, the project as constructed.
PE ____ Date 4/22/16

DESIGNED BY: T. DOGGETT
CHECKED BY: STAFF
DRAWN BY: STAFF
PATH: Q:\KAE\68238\PLANSET\MF\09–10 – ABUTMENT.DWG
TAB: 09 Wednesday, November 05, 2014 12:17:08 PM

STATE OF ALASKA
DEPARTMENT OF TRANSPORTATION & PUBLIC FACILITIES
SOUTHEAST REGION

STATE OF ALASKA 49th TIMOTHY H. DOGGETT CE–9027 REGISTERED PROFESSIONAL ENGINEER 11/05/2014

KAKE FERRY TERMINAL IMPROVEMENTS

ABUTMENT DETAILS

REVISIONS NO.	DATE	DESCRIPTION	PROJECT DESIGNATION	YEAR	SHEET NO.	TOTAL SHEETS
			68238/0939007	2014	09	28

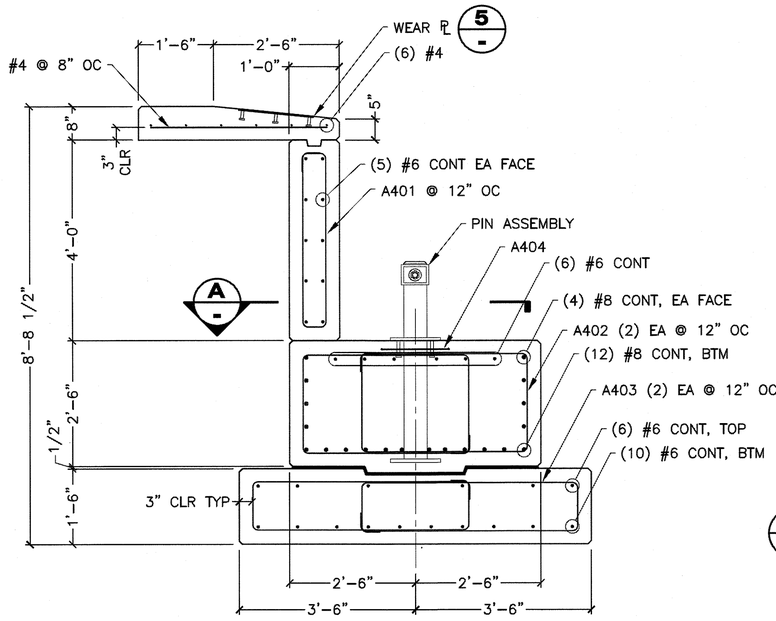

A/10 SECTION

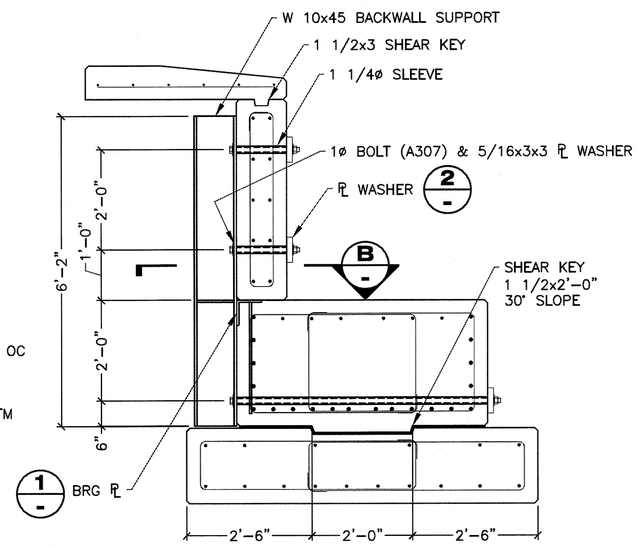

B/10 SECTION
REINFORCEMENT SIMILAR TO SECTION A

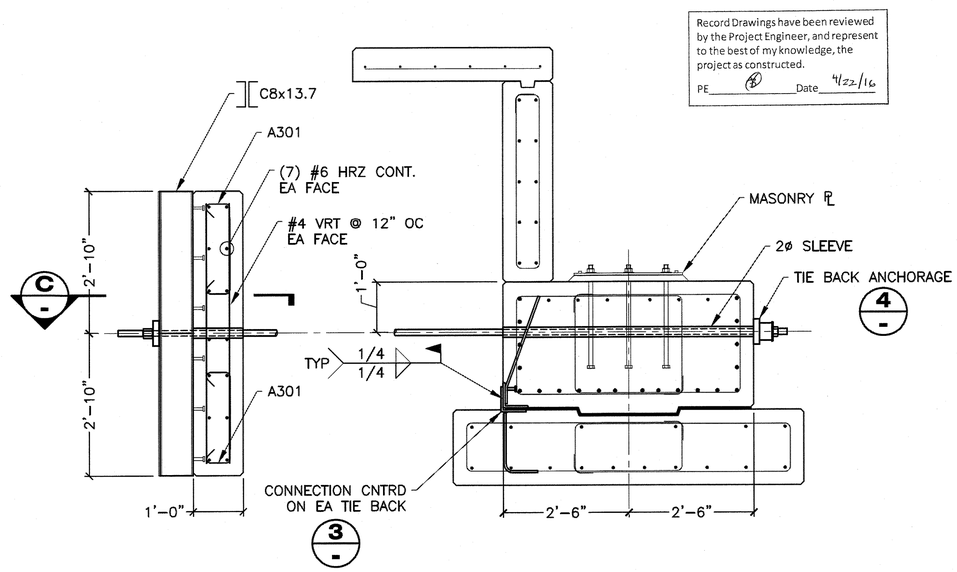

C/10 SECTION
REINFORCEMENT SIMILAR TO SECTION A

Record Drawings have been reviewed by the Project Engineer, and represent to the best of my knowledge, the project as constructed.
PE _____ Date 4/22/16

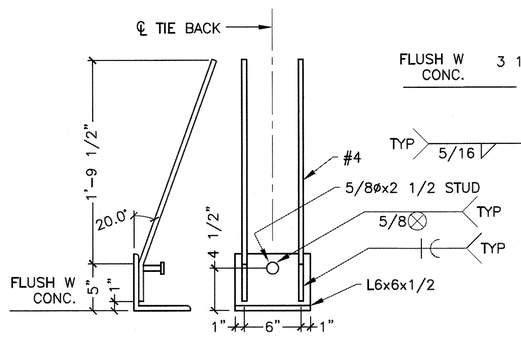

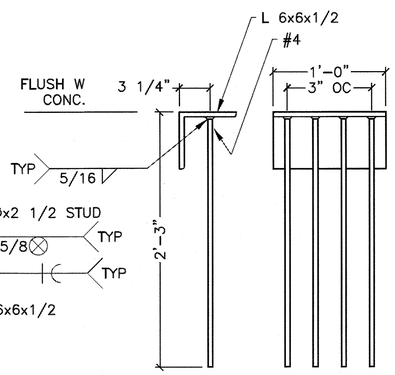

1/- DETAIL

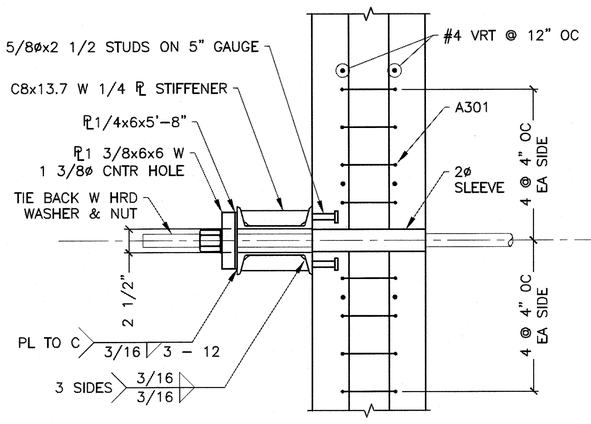

C/- SECTION

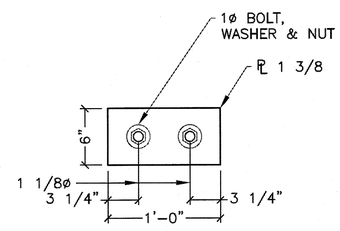

2/- DETAIL

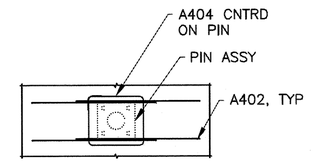

A/- SECTION

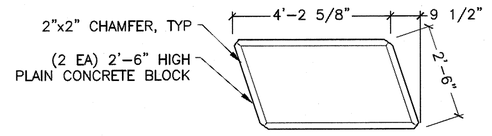

6/10 CONCRETE BLOCK

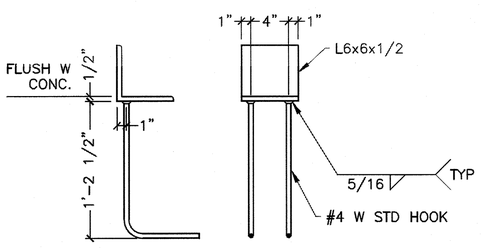

3/- DETAIL

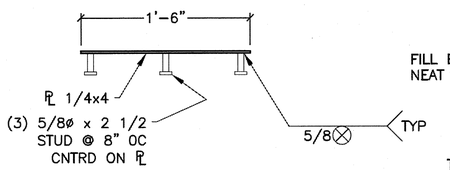

5/- DETAIL

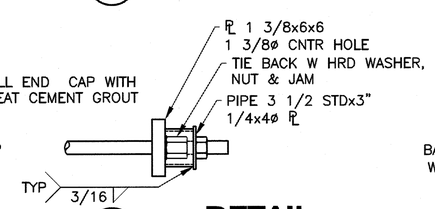

4/- DETAIL

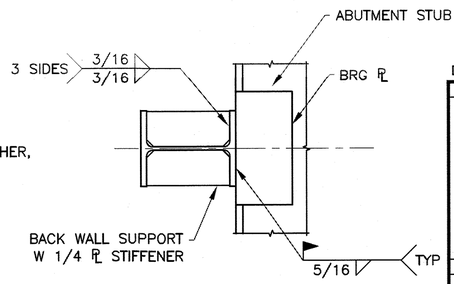

B/- SECTION

DRAWING SCALES ARE FOR FULL-SIZE SHEETS. IF NO SCALE SHOWN, USE DIMENSIONS.

DESIGNED BY: T. DOGGETT
CHECKED BY: STAFF
DRAWN BY: STAFF
11/05/2014

STATE OF ALASKA
DEPARTMENT OF TRANSPORTATION
& PUBLIC FACILITIES
SOUTHEAST REGION

KAKE FERRY TERMINAL IMPROVEMENTS

ABUTMENT DETAILS

PATH: Q:\KAE\68238\PLANSET\MF\09-10 - ABUTMENT.DWG
TAB: 10 Wednesday, November 05, 2014 12:17:17 PM

REVISIONS NO.	DATE	DESCRIPTION	PROJECT DESIGNATION	YEAR	SHEET NO.	TOTAL SHEETS
			68238/0939007	2014	10	28

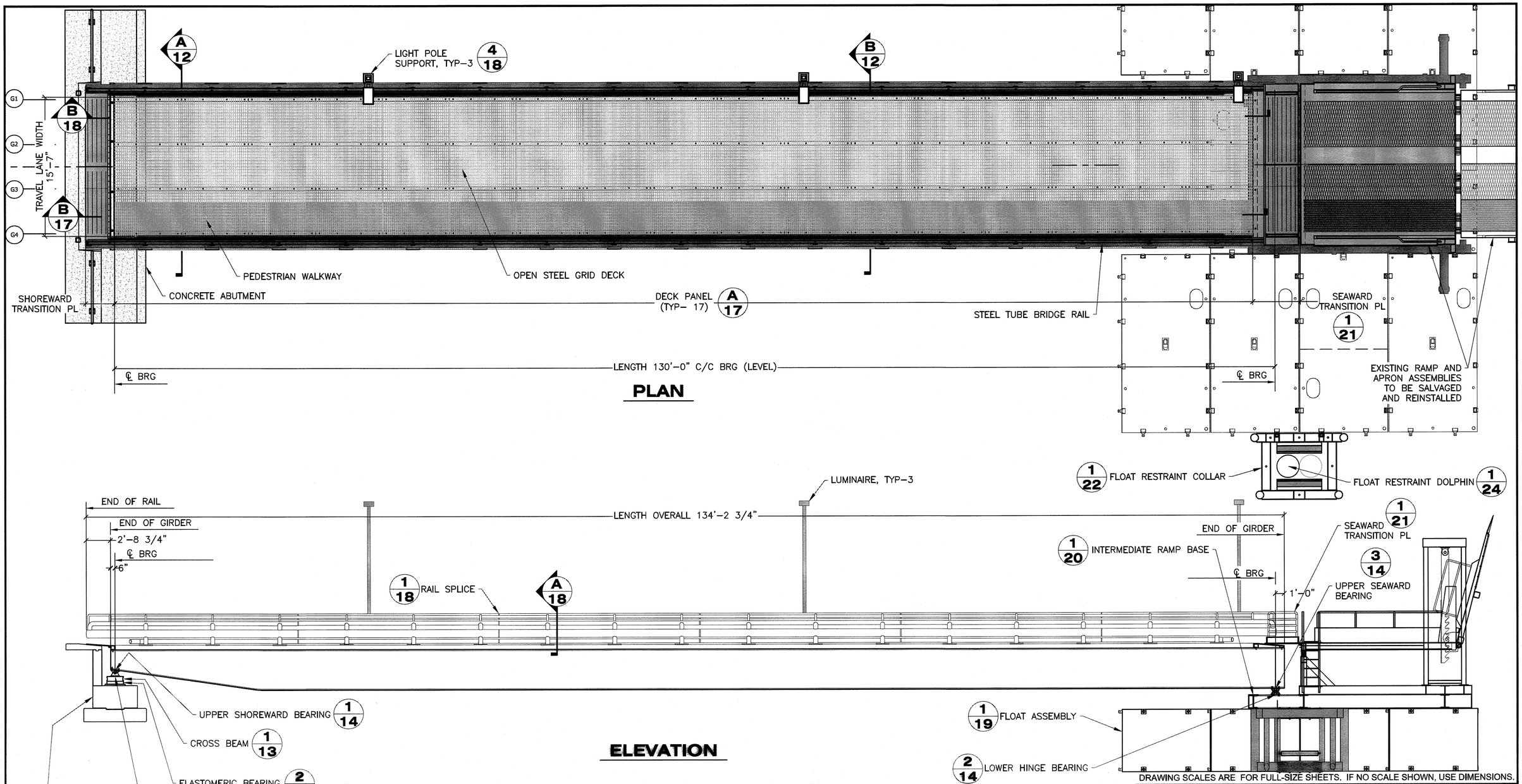

DRAWING SCALES ARE FOR FULL-SIZE SHEETS. IF NO SCALE SHOWN, USE DIMENSIONS.

Record Drawings have been reviewed by the Project Engineer, and represent to the best of my knowledge, the project as constructed.
PE _____ Date 4/22/16

DESIGNED BY: T. DOGGETT
STATE OF ALASKA – 49th – TIMOTHY H. DOGGETT – CE-9027 – REGISTERED PROFESSIONAL ENGINEER
11/05/2014
CHECKED BY: STAFF
DRAWN BY: STAFF

STATE OF ALASKA
DEPARTMENT OF TRANSPORTATION & PUBLIC FACILITIES
SOUTHEAST REGION

KAKE FERRY TERMINAL IMPROVEMENTS

BRIDGE PLAN & ELEVATION

PATH: Q:\KAE\68238\PLANSET\MF\11 – BRIDGE PLAN & ELEVATION.DWG
TAB: 11 Wednesday, November 05, 2014 12:17:41 PM

REVISIONS NO.	DATE	DESCRIPTION	PROJECT DESIGNATION	YEAR	SHEET NO.	TOTAL SHEETS
			68238/0939007	2014	11	28

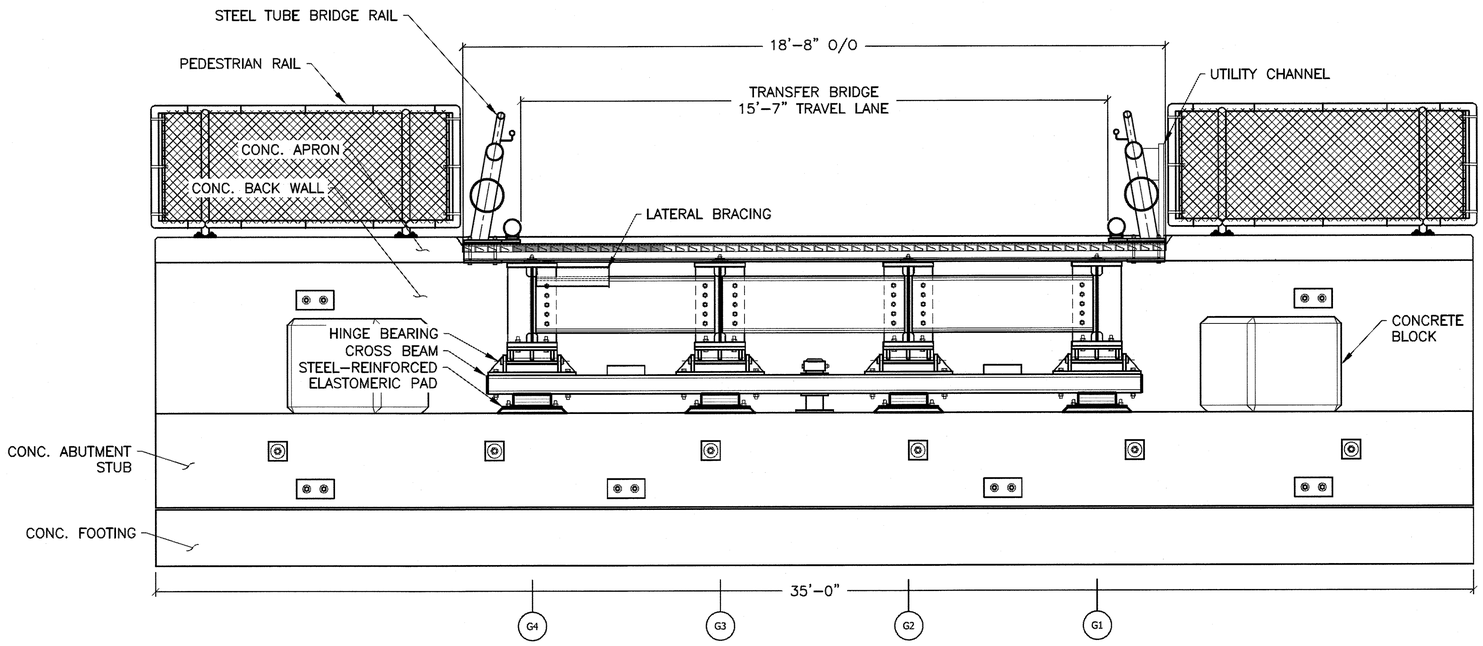

A/12 SECTION FROM SHEET 11

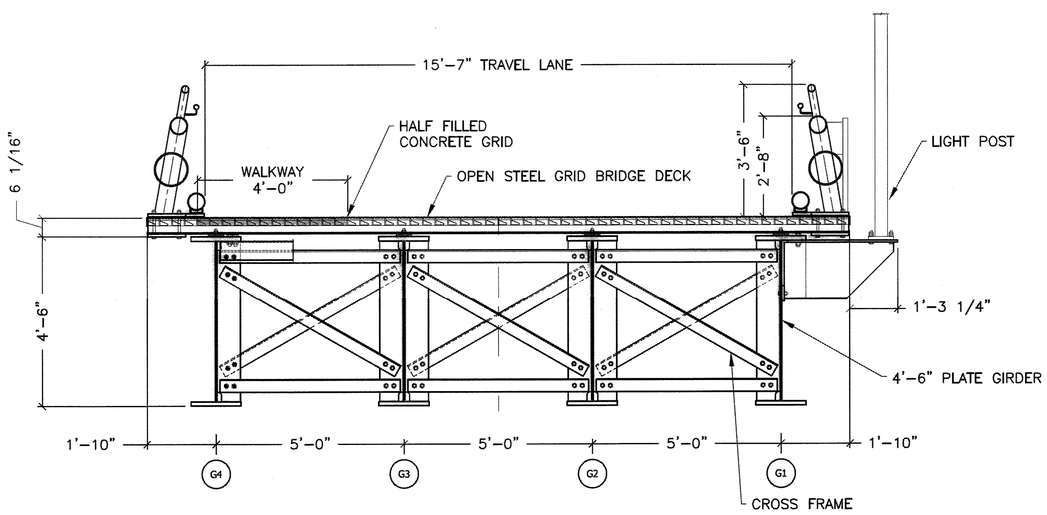

B/12 SECTION FROM SHEET 11

ESTIMATED BRIDGE WT: 235,000 LBS.

GENERAL NOTES: FOLLOWING APPLY TO TRANSFER BRIDGE.

DESIGN SPECIFICATIONS:
AASHTO LRFD BRIDGE DESIGN SPECIFICATIONS 6TH ED./2012 WITH 2013 INTERIM REVISIONS
AISC STEEL CONSTRUCTION MANUAL 14TH ED. LRFD.

DESIGN BASIS:
LIVE LOAD – HL–93
BASIC WIND SPEED – VFM = 100 MPH
MULTIPLE PRESENCE FACTOR = 1.08 (ADTT<100)
DYNAMIC ALLOWANCE = 1.33 LIVE. 1.15 FATIGUE
DEFLECTION CRITERIA – LL DEFLECTION < SPAN/800
As (SITE CLASS E) = 0.277 g

MATERIALS:

PLATE GIRDER FLANGES & WEB	ASTM A709 GR50
STIFFENERS, CONNECTION PLATES, AND MISC. PLATE	ASTM A709 GR50
CROSS FRAMES, DIAPHRAGMS, LATERAL BRACING	ASTM A709 GR36
W–SECTIONS	ASTM A709 GR50
HOLLOW STRUCTURAL SECTIONS	ASTM A500 GRB
PIPE	ASTM A53 GRB, API 5L–X42 PSL 2
HEX HEAD BOLTS, WASHER & NUTS	ASTM A325 TYPE I, F436, F959, & A563 GR DH
OPEN GRID RECTANGULAR STEEL DECK: 5 3/16" DEEP 5.6# RIBBED MAIN RAILS AT 8" OC, (2) 1"x1/4" SUPPLEMENTAL BARS EQ SPACED, & 2"x1/4" CROSS BARS AT 4" OC. TOP SURFACES SERRATED.	ASTM A709 GR50
CONCRETE REINFORCEMENT	ASTM A615 GR60, ASTM A767 (GALVANIZED)
CAST–IN–PLACE CONCRETE	SECTION 501 CLASS A–A
PRECAST CONCRETE	SECTION 501 CLASS P

CHARPY V–NOTCH:
DESIGN DRAWINGS IDENTIFY THE COMPONENTS OF MAIN LOAD CARRYING MEMBERS THAT REQUIRE CHARPY V–NOTCH TESTING. ALL STRUCTURAL STEEL SO DESIGNATED ON THE PLANS SHALL BE TESTED FOR TEMPERATURE ZONE 2 IN ACCORDANCE WITH ASTM A709:

1. TENSION COMPONENTS OF NON FRACTURE CRITICAL MEMBERS, DESIGNATED CATEGORY "T2" ON THE PLANS, SHALL BE TESTED IN ACCORDANCE WITH TABLE 8 OF ASTM A709.
2. TENSION COMPONENTS OF FRACTURE CRITICAL MEMBERS, DESIGNATED CATEGORY "F2" ON THE PLANS, SHALL BE TESTED IN ACCORDANCE WITH TABLE 9 OF ASTM A709.

FABRICATOR QUALIFICATIONS:
PLANTS USED TO PRODUCE STEEL BRIDGE STRUCTURES SHALL BE AISC CERTIFIED – CATEGORY IBR (CERTIFIED BRIDGE FABRICATOR – INTERMEDIATE) AND COMPLY WITH THE PROVISIONS OF AISC CERTIFICATION PROGRAM FOR STEEL BRIDGE FABRICATORS (AISC 205–11).

WELDING:
WELDING DETAILS AND WELDING OPERATIONS SHALL BE IN ACCORDANCE WITH THE CURRENT EDITION OF THE AASHTO/AWS D1.5 BRIDGE WELDING CODE. WELDING OF TUBULAR ELEMENTS AND STAINLESS STEELS SHALL BE IN ACCORDANCE WITH THE CURRENT EDITION OF AWS D1.1 STRUCTURAL WELDING CODE – STEEL AND D1.6 STRUCTURAL WELDING CODE – STAINLESS STEEL, RESPECTIVELY. WELDING PROCEDURES SHALL BE SUBMITTED AND APPROVED PRIOR TO WELDING ON PROJECT. FABRICATOR SHALL FURNISH NONDESTRUCTIVE TESTING OF WELDED CONNECTIONS AS REQUIRED BY AASHTO/AWS D1.5 BRIDGE WELDING CODE.

BOLTED CONNECTIONS:
UNLESS OTHERWISE NOTED, ALL BOLTED CONNECTIONS ARE PRETENSIONED JOINTS USING 7/8" DIAMETER ASTM A325 BOLTS. PRETENSION ACCORDING TO "SPECIFICATION FOR STRUCTURAL JOINTS USING ASTM A325 OR A490 BOLTS" (RCSC) METHOD 8.2.4 DIRECT–TENSION–INDICATOR PRETENSIONING. INSPECT IN ACCORDANCE WITH 9.2 PRETENSIONED JOINTS. AS NOTED ON THE PLANS, HARDENED AND/OR PLATE WASHERS ARE REQUIRED AT SLOTTED AND OVERSIZE HOLES. PLACE A WASHER ON THE PAINTED SIDE OF ALL JOINTS.

PROTECTIVE COATINGS:
PLATE GIRDERS SHALL BE SPRAY METALIZED WITH ZN OR ZN/AL ALLOY, COATED WITH EPOXY SEALER AND TOP COATED WITH POLYURETHANE IN CONFORMANCE WITH PROJECT SPECS. (SECTION 513 – SYSTEM 10), SSPC–CS 23.00, AND AWS C2.18.

ALL ITEMS BOLTED TO THE PLATE GIRDERS, SUCH AS MISCELLANEOUS SHAPES, CROSS FRAMES, DIAPHRAGMS, RAILS, PLATES, HINGES, AND DECKING, SHALL BE HOT DIP GALVANIZED IN CONFORMANCE WITH ASTM A123.

THE SURFACES OF TRANSITION PLATES SUBJECT TO PEDESTRIAN TRAFFIC SHALL BE COATED WITH NON–SKID COATING IN CONFORMANCE WITH PROJECT SPECTS. (SECTION 513 – SYSTEM 7A OR 7B, AS INDICATED ON THE PLANS).

Record Drawings have been reviewed by the Project Engineer, and represent to the best of my knowledge, the project as constructed.
PE _____ Date 4/22/16

DRAWING SCALES ARE FOR FULL-SIZE SHEETS. IF NO SCALE SHOWN, USE DIMENSIONS.

DESIGNED BY: T. DOGGETT
CHECKED BY: STAFF
DRAWN BY: STAFF

STATE OF ALASKA
DEPARTMENT OF TRANSPORTATION
& PUBLIC FACILITIES
SOUTHEAST REGION

STATE OF ALASKA 49th TIMOTHY H. DOGGETT CE–9027 REGISTERED PROFESSIONAL ENGINEER
11/05/2014

KAKE FERRY TERMINAL IMPROVEMENTS

BRIDGE TYPICAL SECTIONS & GENERAL NOTES

PATH: Q:\KAE\68238\PLANSET\MF\12 – BRIDGE TYPICAL SECTIONS & GENERAL NOTES.DWG
TAB: 12 Wednesday, November 05, 2014 12:18:15 PM

REVISIONS NO.	DATE	DESCRIPTION	PROJECT DESIGNATION	YEAR	SHEET NO.	TOTAL SHEETS
			68238/0939007	2014	12	28

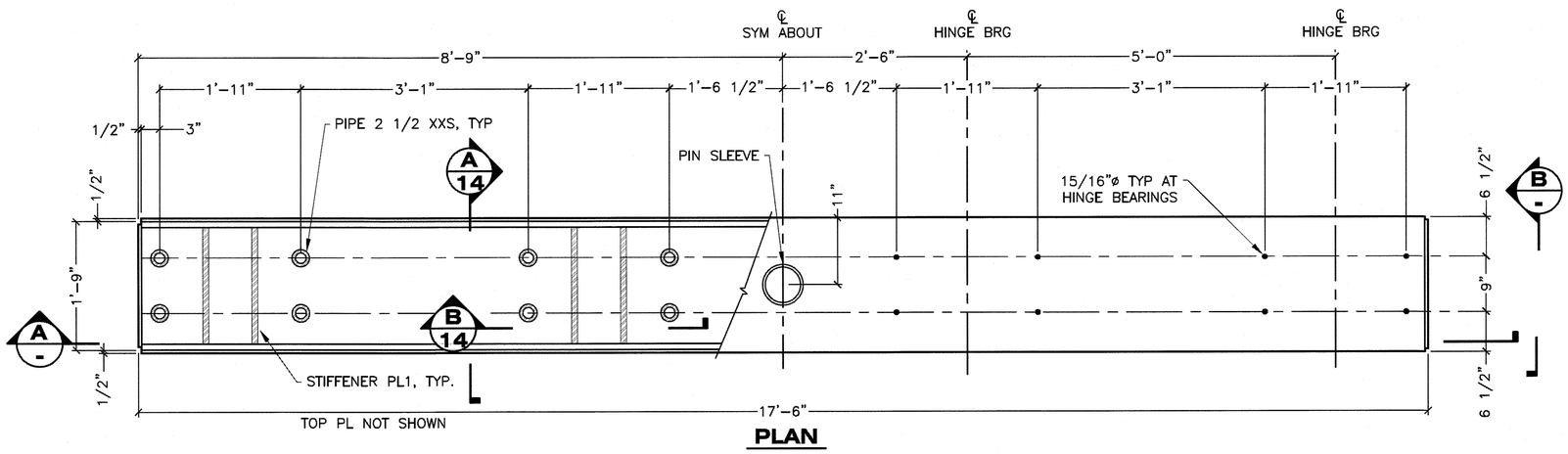

PLAN

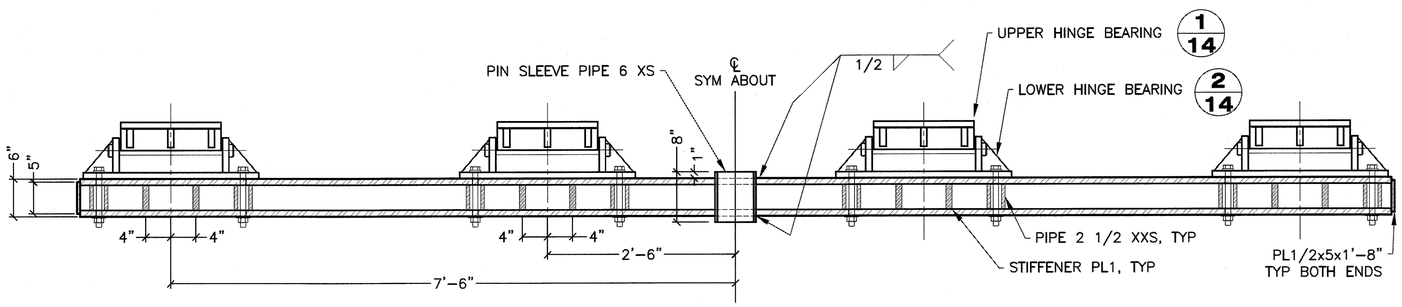

A - SECTION

1/13 CROSS BEAM ASSEMBLY
FROM SHEET 11

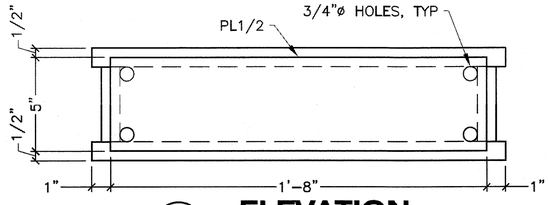

B - ELEVATION

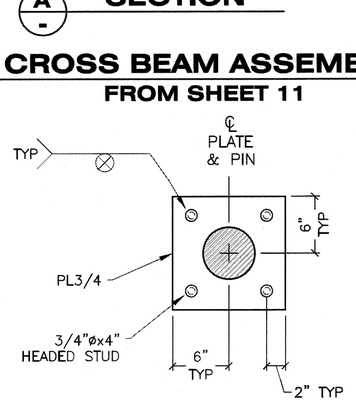

C - SECTION

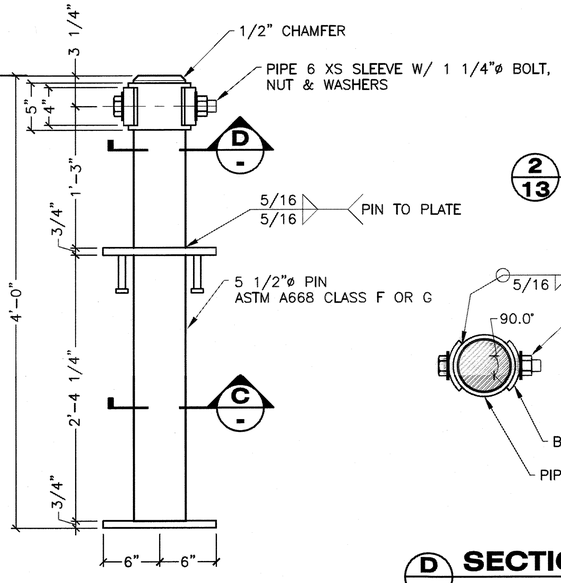

3/13 PIN ASSEMBLY
FROM SHEET 9

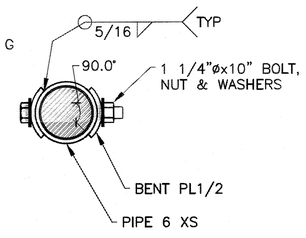

D - SECTION

STEEL REINFORCED ELASTOMERIC BEARING:

4"x12"x1'-10"
NOMINAL HARDNESS 50 DUROMETER SHORE A SCALE
(3) 0.875" THICK INTERNAL LAYERS
(2) 0.500" THICK EXTERNAL LAYERS
12 GA. STEEL REINFORCEMENT
MAX DESIGN DEAD PLUS LIVE SERVICE COMPRESSIVE LOAD = 102 KIPS
LOW-TEMPERATURE GRADE 5

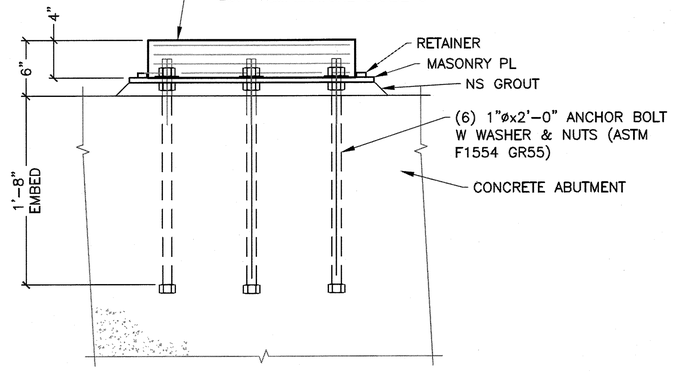

ELEVATION

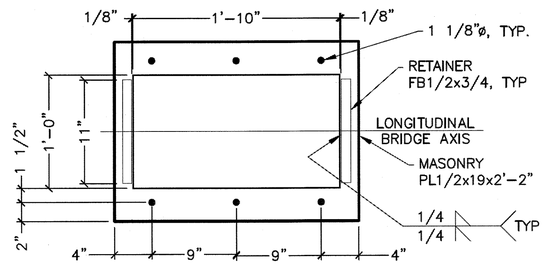

PLAN

2/13 STEEL-REINFORCED ELASTOMERIC BEARING
FROM SHEET 11

Record Drawings have been reviewed by the Project Engineer, and represent to the best of my knowledge, the project as constructed.
PE ____ Date 4/22/16

DRAWING SCALES ARE FOR FULL-SIZE SHEETS. IF NO SCALE SHOWN, USE DIMENSIONS.

DESIGNED BY: T. DOGGETT
STATE OF ALASKA · 49th · TIMOTHY H. DOGGETT · CE-9027 · REGISTERED PROFESSIONAL ENGINEER
11/05/2014
CHECKED BY: STAFF
DRAWN BY: STAFF

STATE OF ALASKA
DEPARTMENT OF TRANSPORTATION & PUBLIC FACILITIES
SOUTHEAST REGION

KAKE FERRY TERMINAL IMPROVEMENTS

BRIDGE CROSS BEAM & ELASTOMERIC BEARING

PATH: Q:\KAE\68238\PLANSET\MF\13 - BRIDGE CROSS BEAM & ELASTOMERIC BEARING.DWG
TAB: 13 Wednesday, November 05, 2014 1:00:27 PM

REVISIONS NO.	DATE	DESCRIPTION

PROJECT DESIGNATION	YEAR	SHEET NO.	TOTAL SHEETS
68238/0939007	2014	13	28

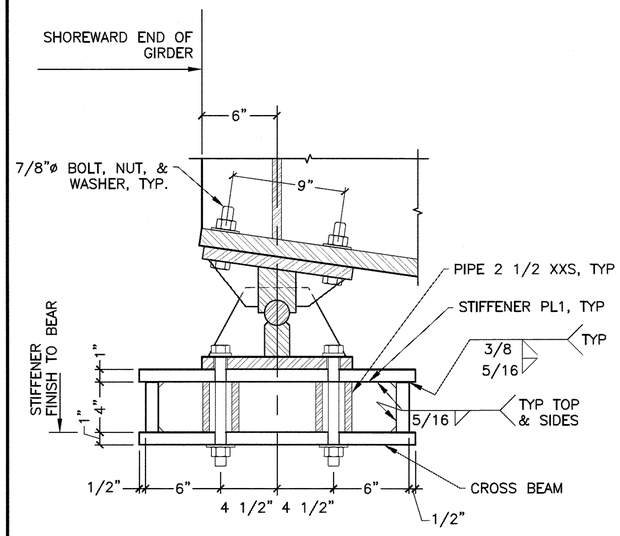

A 14 SECTION FROM SHEET 13

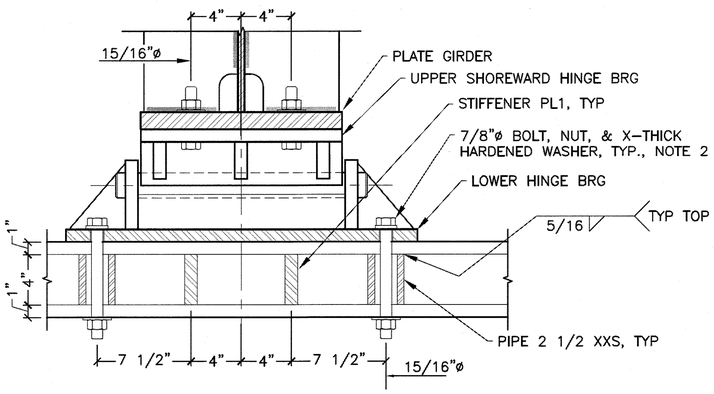

B 14 SECTION FROM SHEET 13

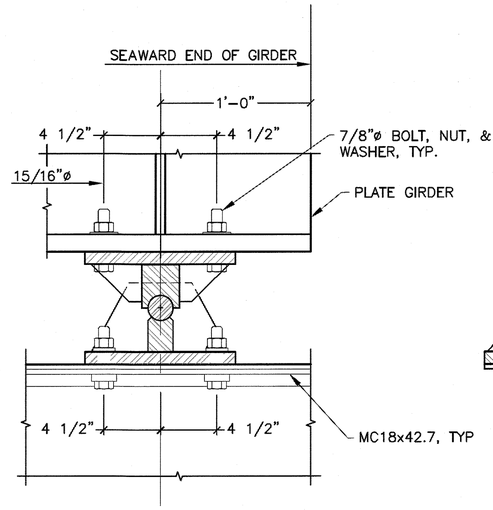

C 14 SECTION FROM SHEET 20

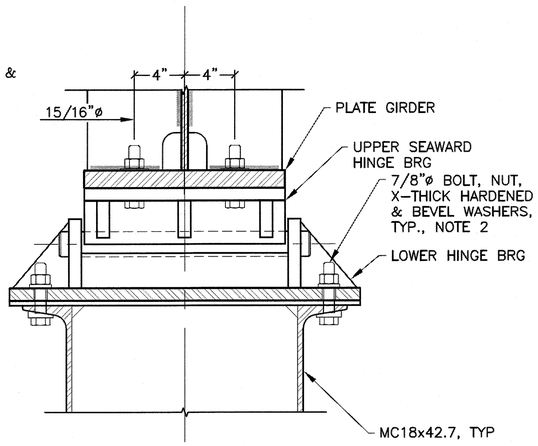

D 14 SECTION FROM SHEET 20

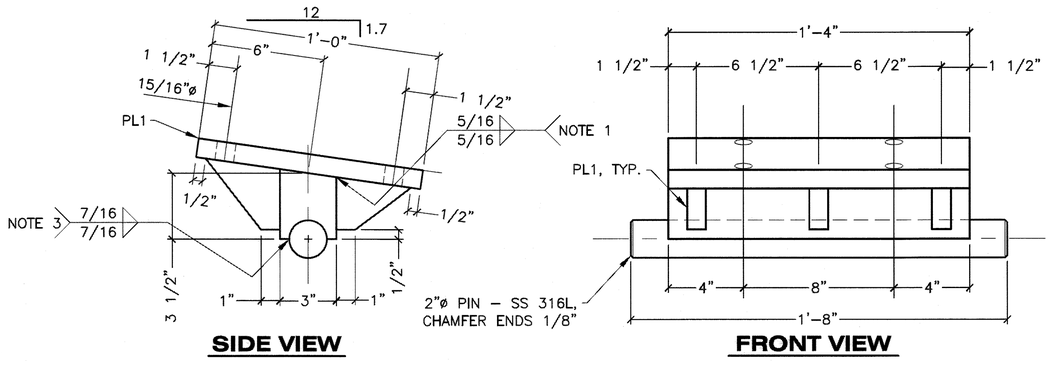

1 14 UPPER SHOREWARD HINGE BEARING FROM SHEETS 11 & 13

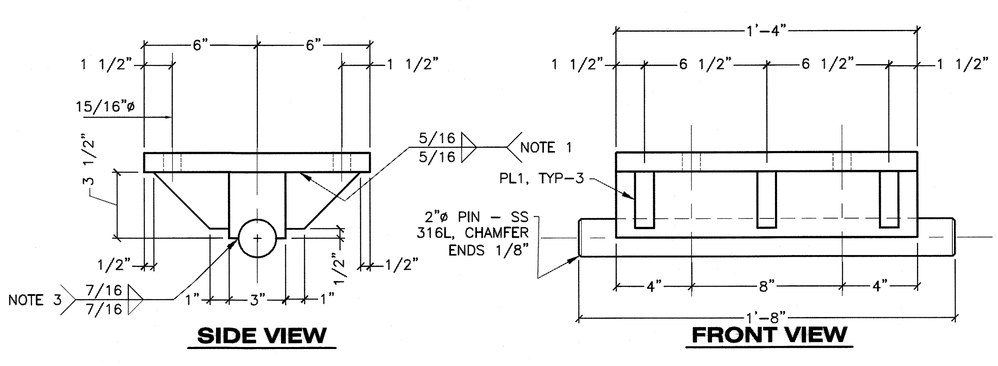

3 14 UPPER SEAWARD HINGE BEARING FROM SHEET 11

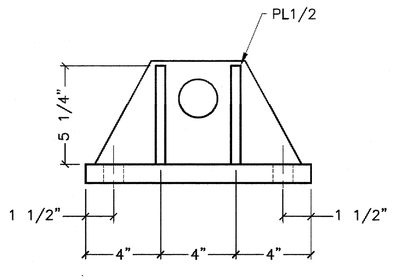

END VIEW

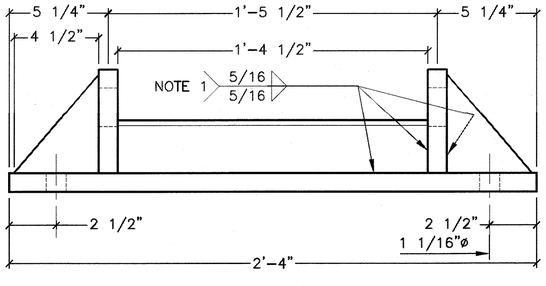

FRONT VIEW

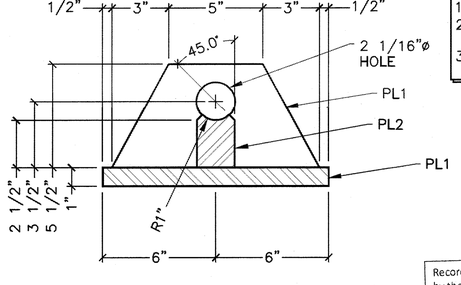

SECTION

2 14 LOWER HINGE BEARING FROM SHEETS 11 & 13

NOTES:
1. SEAL ALL WELDS.
2. BOLTED CONNECTIONS ARE SLIP–CRITICAL, CLASS C (ROUGHENED HDG). PRETENSION BOLTS IN ACCORDANCE WITH RSCS, 8.2.4 DIRECT–TENSION–INDICATOR PRETENSIONING AND INSPECT PER 9.3 SLIP–CRITICAL JOINTS.
3. ASSEMBLY – GALVANIZE UPPER AND LOWER SECTIONS, INSTALL PIN THROUGH LOWER SECTION AND THEN WELD UPPER SECTION TO PIN.

Record Drawings have been reviewed by the Project Engineer, and represent to the best of my knowledge, the project as constructed.
PE _____ Date 4/22/16

DRAWING SCALES ARE FOR FULL-SIZE SHEETS. IF NO SCALE SHOWN, USE DIMENSIONS.

DESIGNED BY: T. DOGGETT
STATE OF ALASKA – 49th – TIMOTHY H. DOGGETT – CE-9027 – REGISTERED PROFESSIONAL ENGINEER
11/05/2014
CHECKED BY: STAFF
DRAWN BY: STAFF

STATE OF ALASKA
DEPARTMENT OF TRANSPORTATION & PUBLIC FACILITIES
SOUTHEAST REGION

KAKE FERRY TERMINAL IMPROVEMENTS

BRIDGE BEARINGS

PATH: Q:\KAE\68238\PLANSET\MF\14 – BRIDGE BEARINGS.DWG
TAB: 14 Wednesday, November 05, 2014 12:19:12 PM

REVISIONS NO.	DATE	DESCRIPTION	PROJECT DESIGNATION	YEAR	SHEET NO.	TOTAL SHEETS
			68238/0939007	2014	14	28

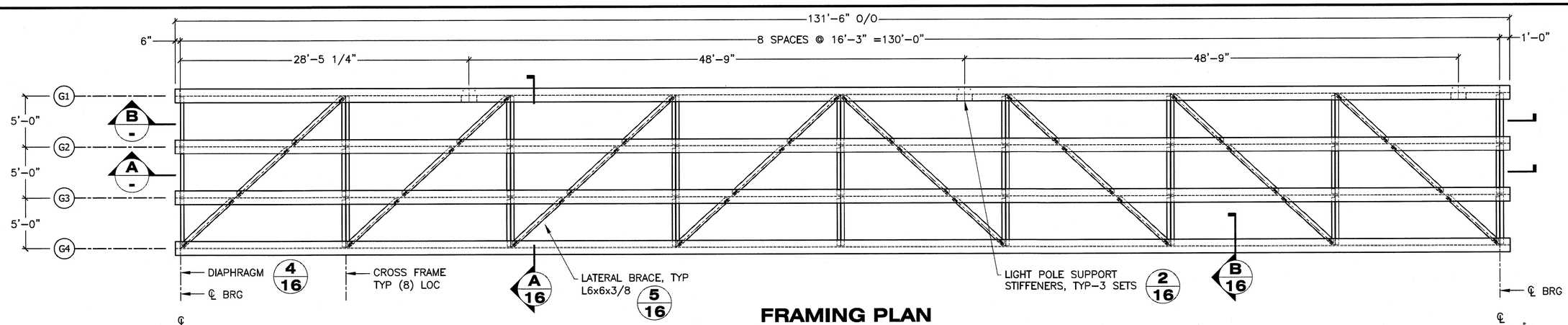

FRAMING PLAN

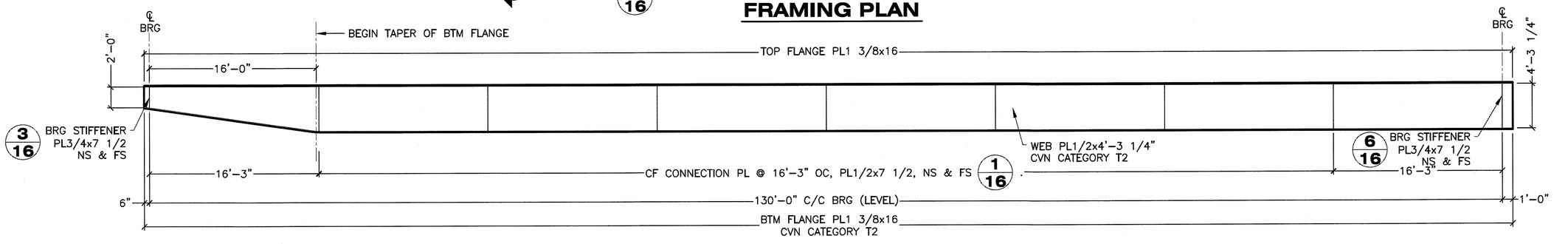

A - INTERIOR GIRDER ELEVATION
TYPICAL G2 & G3

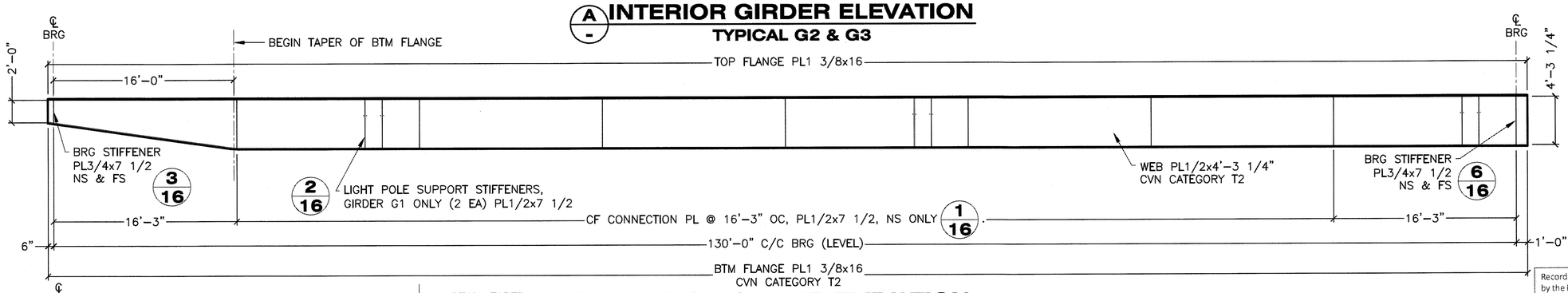

B - EXTERIOR GIRDER ELEVATION
G1 SHOWN, G4 OPP HAND

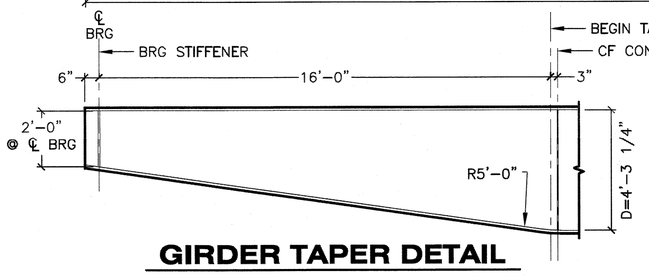

GIRDER TAPER DETAIL

1. SPLICES IN GIRDERS & GIRDER COMPONENTS SHALL BE MADE BY CJP GROOVE WELDS. SPLICES BETWEEN SECTIONS OF BUILT-UP GIRDERS SHALL PREFERABLY BE MADE IN A SINGLE TRANSVERSE PLANE. SHOP SPLICES OF WEBS AND FLANGES MADE BEFORE THE WEBS AND FLANGES ARE JOINED TO EACH OTHER MAY BE LOCATED IN A SINGLE TRANSVERSE PLANE OR MULTIPLE TRANSVERSE PLANES. NO SPLICES PERMITTED IN MIDDLE THIRD OF SPAN.
2. QC EXAMINATION OF CJP GROOVE WELDS IN BUTT JOINTS AND FILLET OR PJP GROOVE WELDS JOINING PRIMARY COMPONENTS OF MAIN MEMBERS SHALL BE IN ACCORDANCE WITH AWS D1.5 – 6.7.1 AND 6.7.2, RESPECTIVELY.
3. ALL DIMENSIONS ARE SHOWN WITH BRIDGE LEVEL.
4. ALL BRG STIFFENERS AND CONNECTION PLATES ARE NORMAL TO FLANGES.
5. GIRDERS G1, G2, G3, AND G4 ARE MAIN LOAD CARRYING MEMBERS. TENSION COMPONENTS OF THESE MEMBERS REQUIRE CVN TESTING.

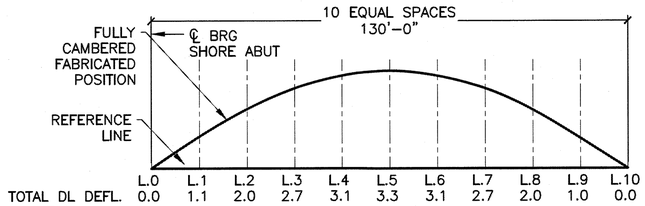

CAMBER DIAGRAM

Record Drawings have been reviewed by the Project Engineer, and represent to the best of my knowledge, the project as constructed.
PE _____ Date 4/22/16

DRAWING SCALES ARE FOR FULL-SIZE SHEETS. IF NO SCALE SHOWN, USE DIMENSIONS.

DESIGNED BY: T. DOGGETT
STATE OF ALASKA 49th TIMOTHY H. DOGGETT CE-9027 REGISTERED PROFESSIONAL ENGINEER
11/05/2014
CHECKED BY: STAFF
DRAWN BY: STAFF
PATH: Q:\KAE\68238\PLANSET\MF\15 – BRIDGE GIRDER FRAMING.DWG
TAB: 15 Wednesday, November 05, 2014 12:19:42 PM

STATE OF ALASKA
DEPARTMENT OF TRANSPORTATION & PUBLIC FACILITIES
SOUTHEAST REGION

KAKE FERRY TERMINAL IMPROVEMENTS

BRIDGE GIRDER FRAMING

REVISIONS NO.	DATE	DESCRIPTION	PROJECT DESIGNATION	YEAR	SHEET NO.	TOTAL SHEETS
			68238/0939007	2014	15	28

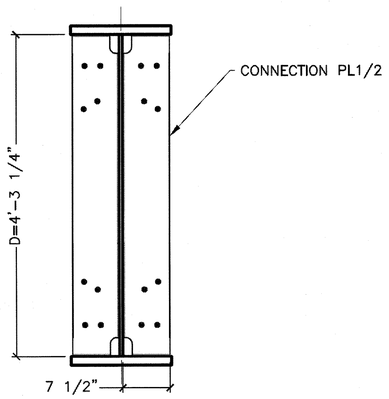

1/16 CONNECTION PL DETAIL
FROM SHEET 15

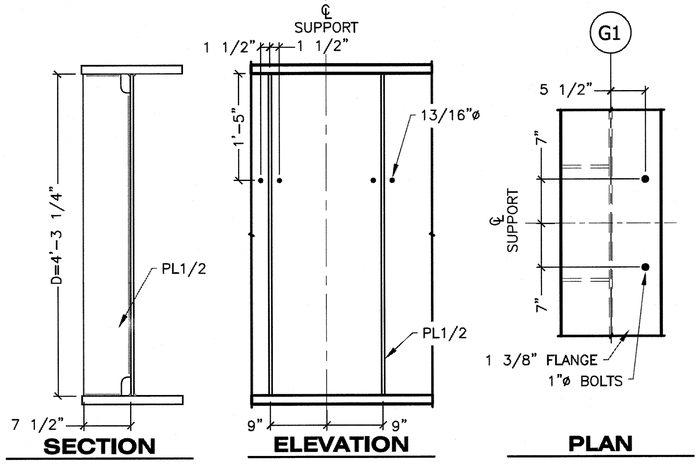

SEE 4/18 FOR SUPPORT BRACKET DETAIL

2/16 LIGHT POLE SUPPORT DETAIL
FROM SHEET 15

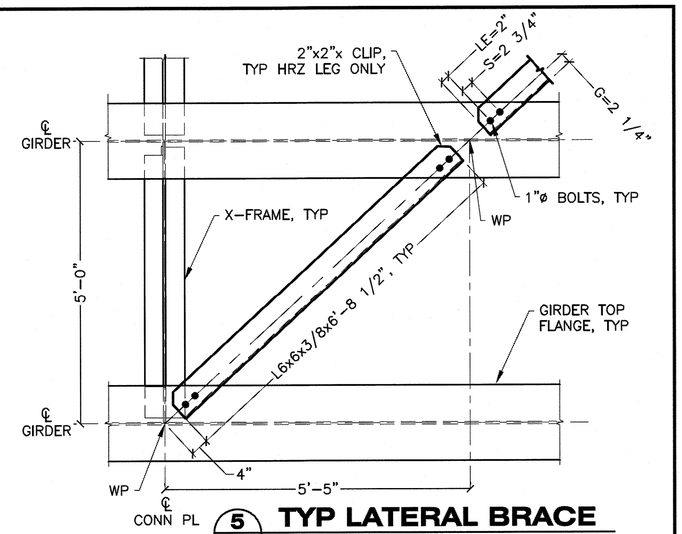

5/16 TYP LATERAL BRACE
FROM SHEET 15

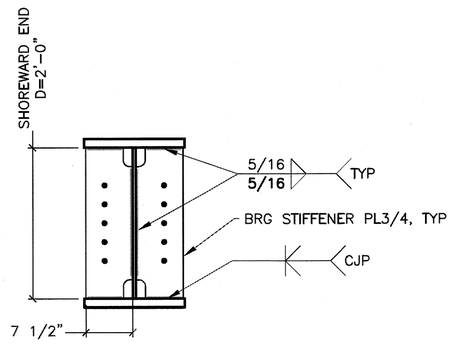

3/16 BEARING STIFFENERS
FROM SHEET 15

TYP 3 LOCATIONS AT GIRDER G1 ONLY

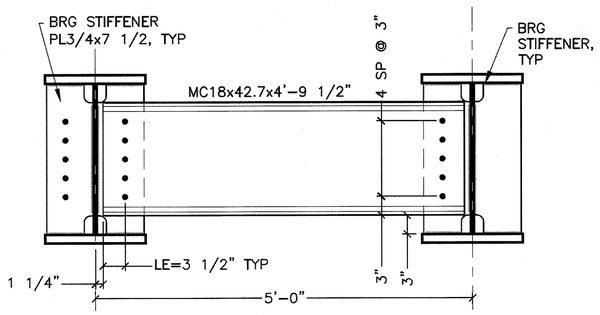

4/16 END DIAPHRAGM
LOOKING FROM INTERIOR
FROM SHEET 15

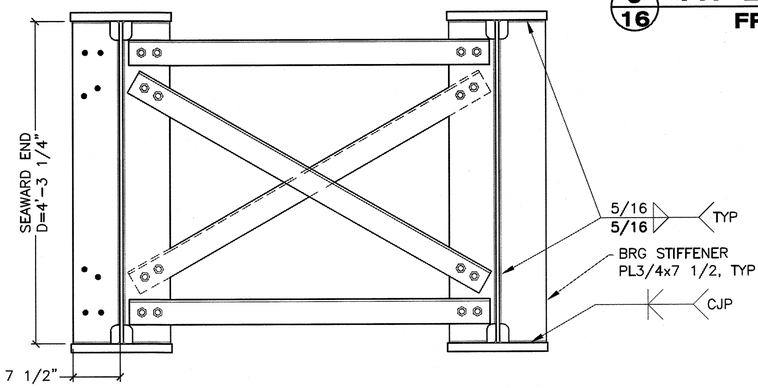

6/16 END CROSS FRAME
FROM SHEET 15

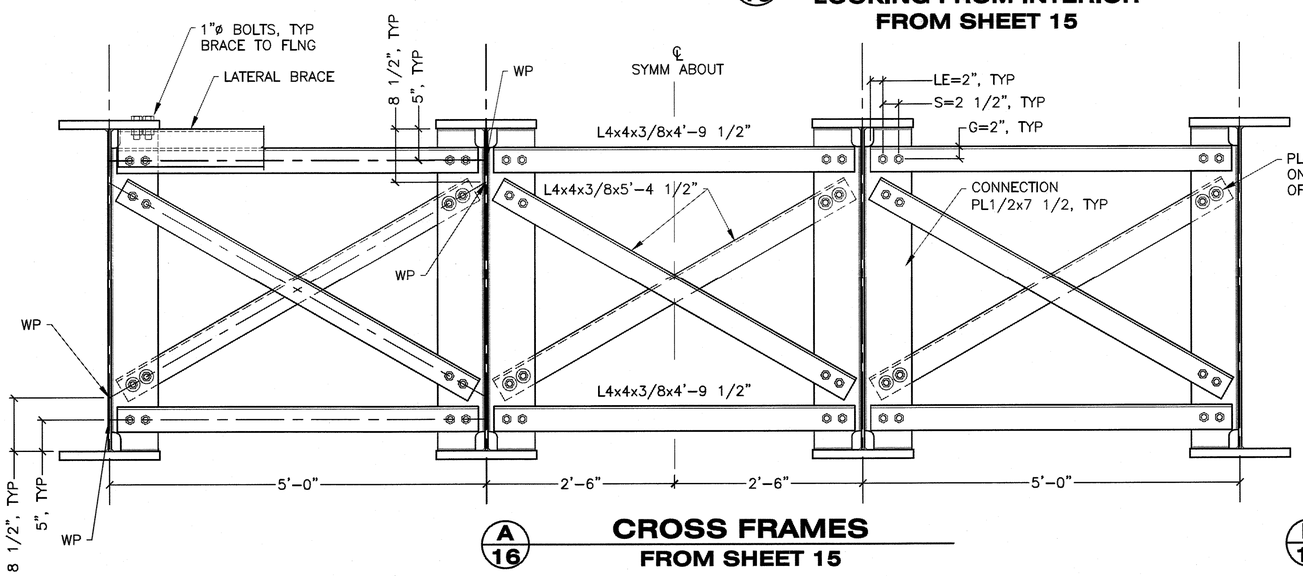

A/16 CROSS FRAMES
FROM SHEET 15

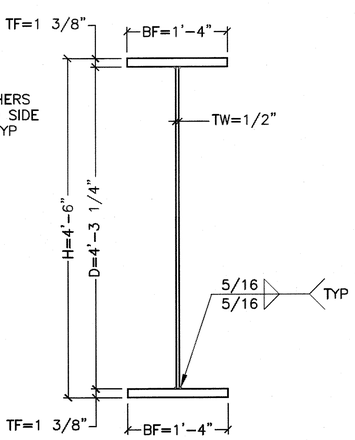

B/16 TYP GIRDER SECTION
FROM SHEET 15

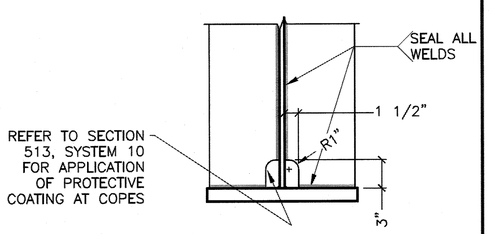

TYP COPE DETAIL

Record Drawings have been reviewed by the Project Engineer, and represent to the best of my knowledge, the project as constructed.
PE _____ Date 4/22/16

DRAWING SCALES ARE FOR FULL-SIZE SHEETS. IF NO SCALE SHOWN, USE DIMENSIONS.

DESIGNED BY: T. DOGGETT
DRAWN BY: STAFF
CHECKED BY: STAFF

STATE OF ALASKA — 49th — TIMOTHY H. DOGGETT — CE-9027 — REGISTERED PROFESSIONAL ENGINEER
11/05/2014

STATE OF ALASKA
DEPARTMENT OF TRANSPORTATION & PUBLIC FACILITIES
SOUTHEAST REGION

KAKE FERRY TERMINAL IMPROVEMENTS

BRIDGE GIRDER DETAILS

PATH: Q:\KAE\68238\PLANSET\MF\16 - BRIDGE GIRDER DETAILS.DWG
TAB: 16 Wednesday, November 05, 2014 12:20:16 PM

REVISIONS NO.	DATE	DESCRIPTION	PROJECT DESIGNATION	YEAR	SHEET NO.	TOTAL SHEETS
			68238/0939007	2014	16	28

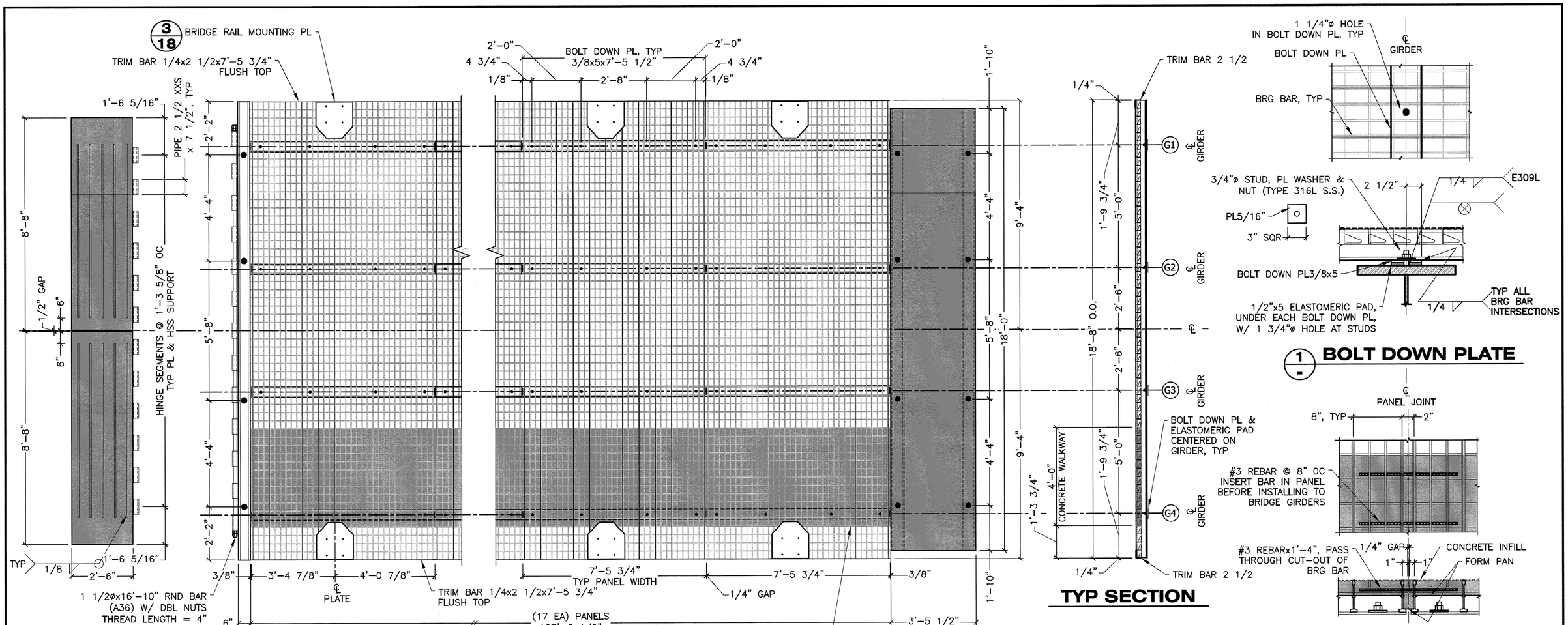

A/17 **PARTIAL PLAN - DECK**
FROM SHEET 11

TYP SECTION

1/- **BOLT DOWN PLATE**

2/- **TYP PANEL JOINT**

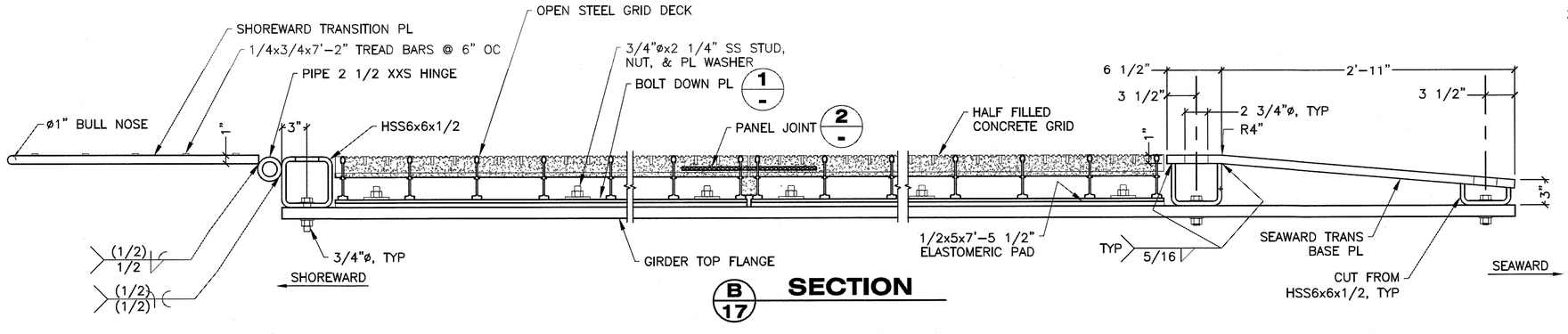

B/17 **SECTION**

Record Drawings have been reviewed by the Project Engineer, and represent to the best of my knowledge, the project as constructed.
PE _____ Date 4/22/16

NOTES:

1. PROTECTIVE COATINGS (SECTION 513):
   SHOREWARD TRANSITION PL – SYSTEM 7A
   SEAWARD TRANSITION BASE PL – SYSTEM 7B
   CONCRETE INFILL WALKWAY – SYSTEM 9
2. CLASS A–A CONCRETE INFILL. TEXTURE WITH BROOM FINISH.

DRAWING SCALES ARE FOR FULL-SIZE SHEETS. IF NO SCALE SHOWN, USE DIMENSIONS.

DESIGNED BY: T. DOGGETT
STATE OF ALASKA 49th TIMOTHY H. DOGGETT CE-9027 REGISTERED PROFESSIONAL ENGINEER
11/05/2014
CHECKED BY: STAFF
DRAWN BY: STAFF
PATH: Q:\KAE\68238\PLANSET\MF\17 – BRIDGE DECK.DWG
TAB: 17 Wednesday, November 05, 2014 12:20:42 PM

STATE OF ALASKA
DEPARTMENT OF TRANSPORTATION & PUBLIC FACILITIES
SOUTHEAST REGION

KAKE FERRY TERMINAL IMPROVEMENTS

BRIDGE DECK

REVISIONS NO.	DATE	DESCRIPTION	PROJECT DESIGNATION	YEAR	SHEET NO.	TOTAL SHEETS
			68238/0939007	2014	17	28

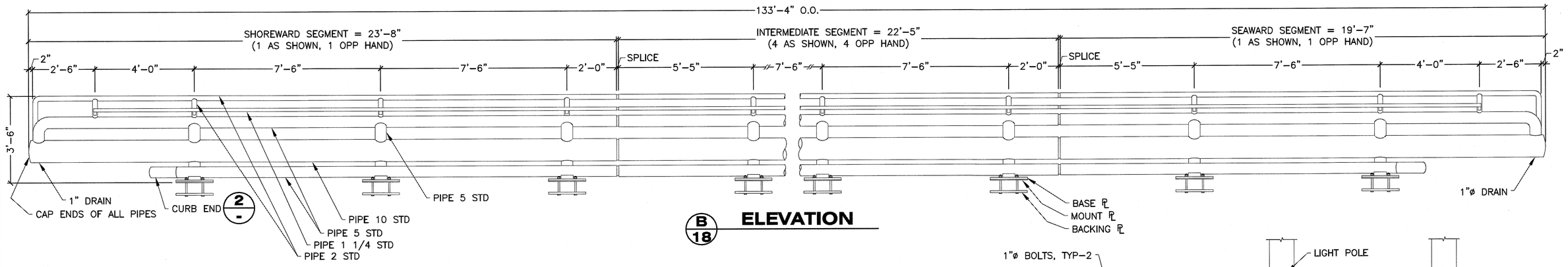

B/18 **ELEVATION**

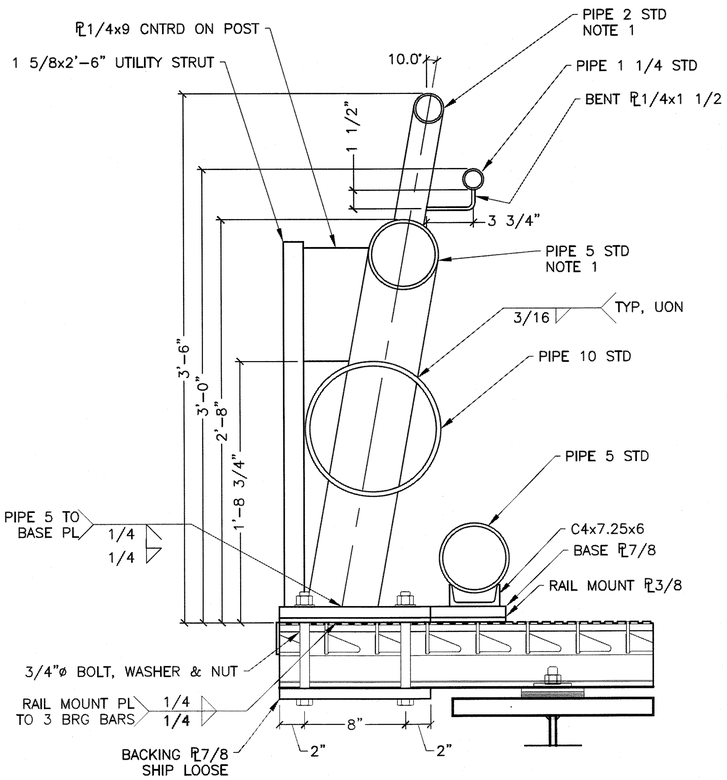

A/18 **TYP SECTION - BRIDGE RAIL**

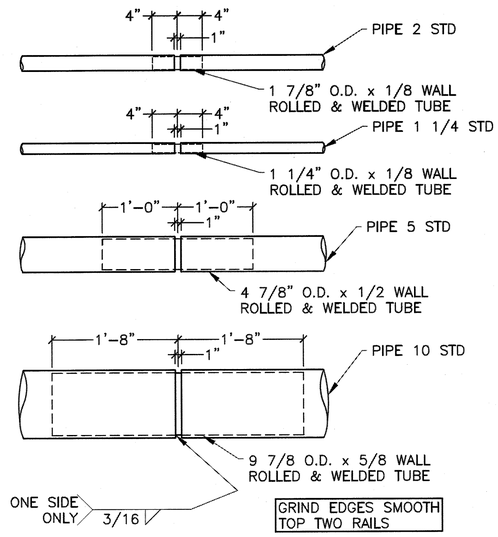

1/18 **BRIDGE RAIL SPLICE**
FROM SHEET 11

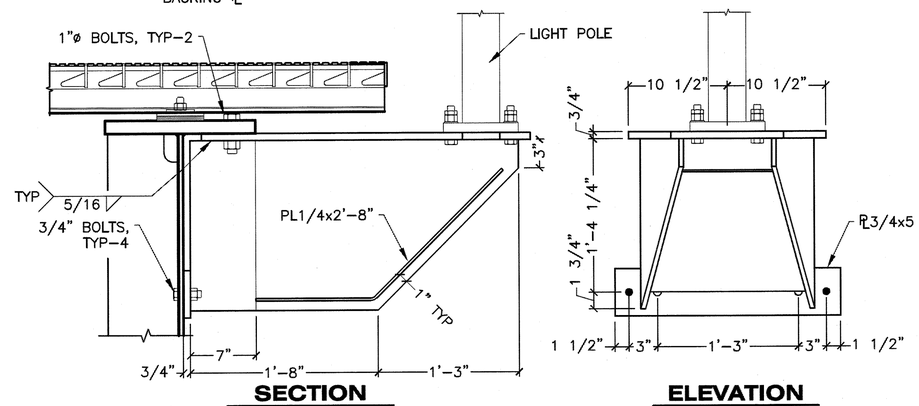

SECTION **ELEVATION**

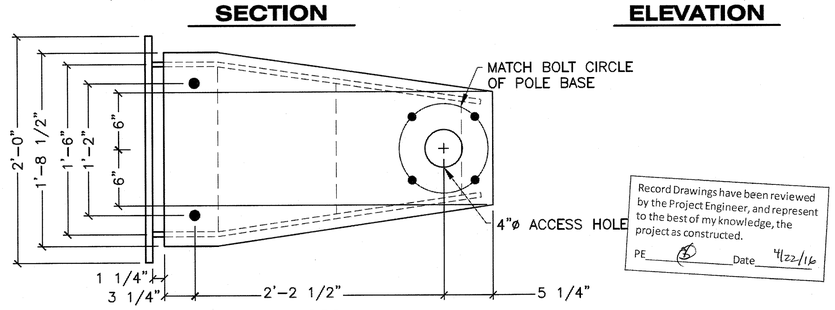

PLAN

4/18 **LIGHT POLE SUPPORT BRACKET**
FROM SHEETS 11 & 16

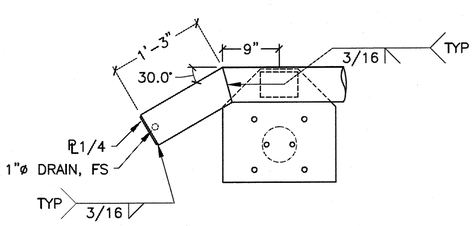

2/- **CURB END**

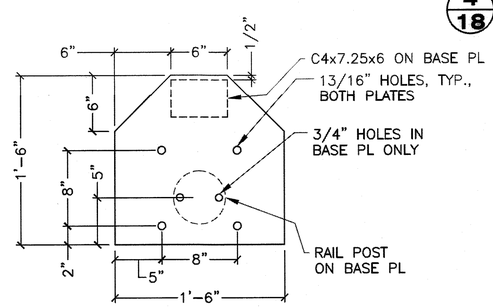

3/18 **BASE PLATE**
MOUNT PL SIMILAR

NOTES:

1. 1"ø HOLE IN RAILS WHERE POSTS AND RAILS OVERLAP TO PERMIT VENTING OF CLOSED SECTIONS.

Record Drawings have been reviewed by the Project Engineer, and represent to the best of my knowledge, the project as constructed.
PE ____ Date 4/22/16

DRAWING SCALES ARE FOR FULL-SIZE SHEETS. IF NO SCALE SHOWN, USE DIMENSIONS.

DESIGNED BY: T. DOGGETT	STATE OF ALASKA DEPARTMENT OF TRANSPORTATION & PUBLIC FACILITIES SOUTHEAST REGION
STATE OF ALASKA 49th — TIMOTHY H. DOGGETT CE-9027 REGISTERED PROFESSIONAL ENGINEER — 11/05/2014	**KAKE FERRY TERMINAL IMPROVEMENTS**
CHECKED BY: STAFF	**BRIDGE RAIL**
DRAWN BY: STAFF	
PATH: O:\KAE\68238\PLANSET\MF\18 – BRIDGE RAIL.DWG TAB: 18 Wednesday, November 05, 2014 12:21:10 PM	

REVISIONS			PROJECT DESIGNATION	YEAR	SHEET NO.	TOTAL SHEETS
NO.	DATE	DESCRIPTION	68238/0939007	2014	18	28

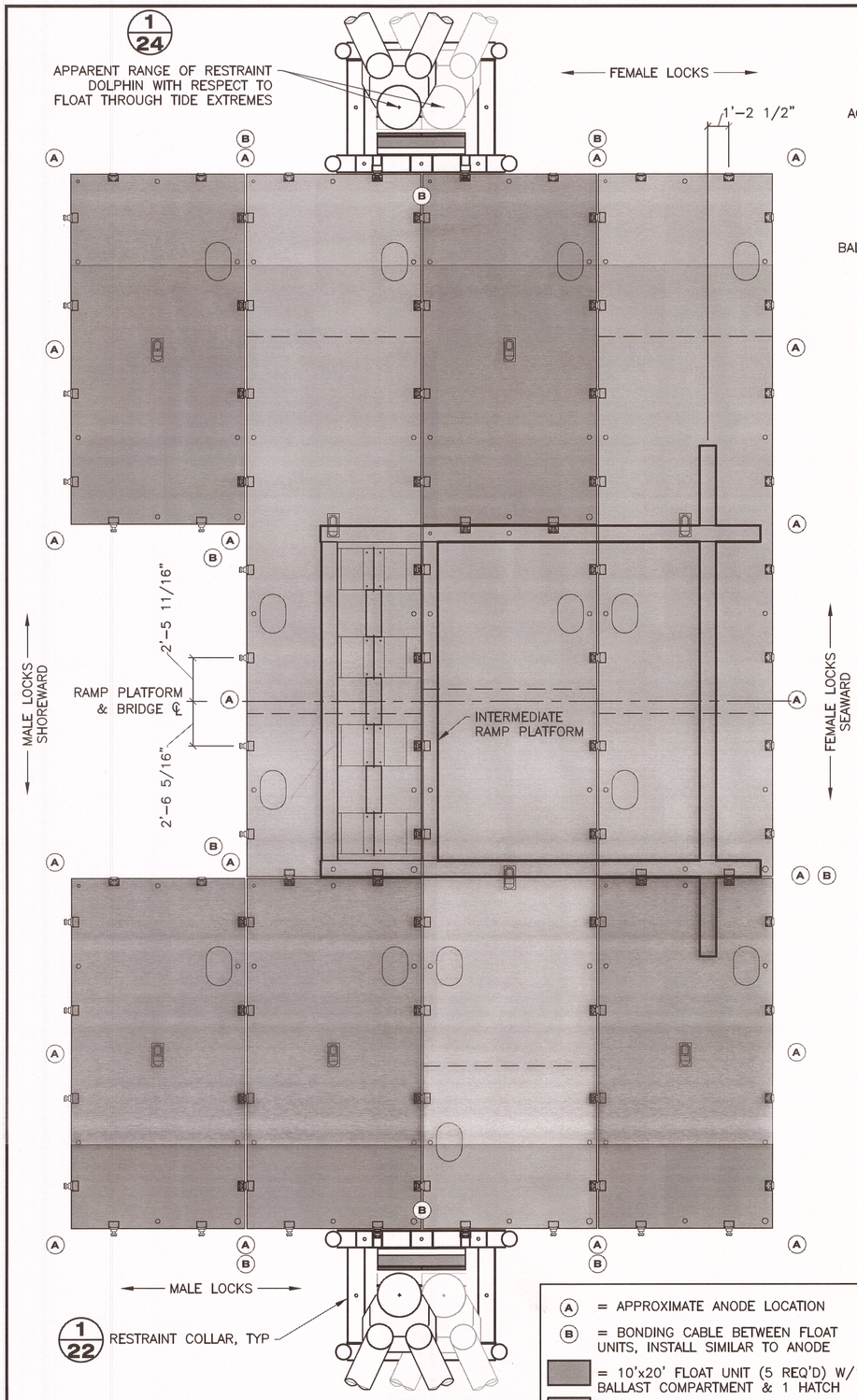

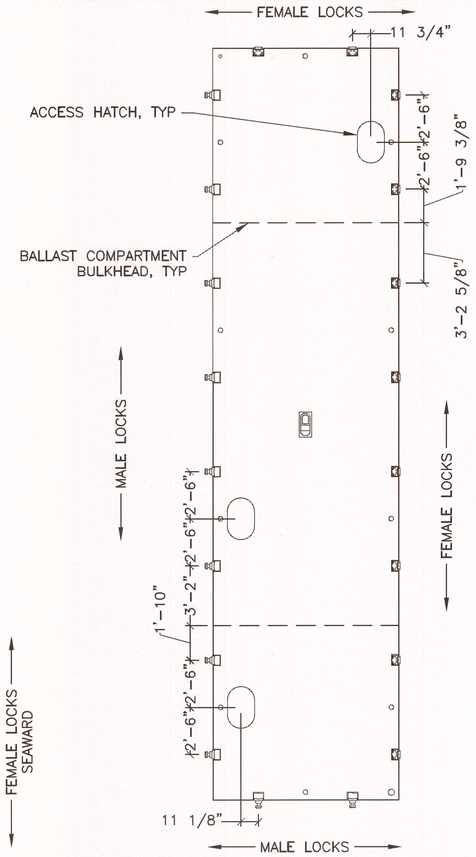

40' FLOAT UNIT
TYPICAL

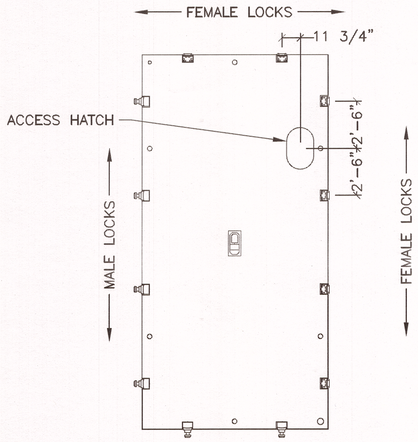

20' FLOAT UNIT
TYPICAL

1/19 **FLOAT ASSEMBLY**
FROM SHEET 11

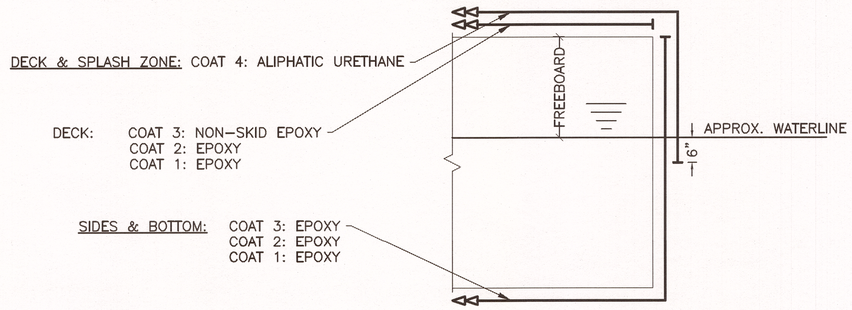

COATING SCHEMATIC

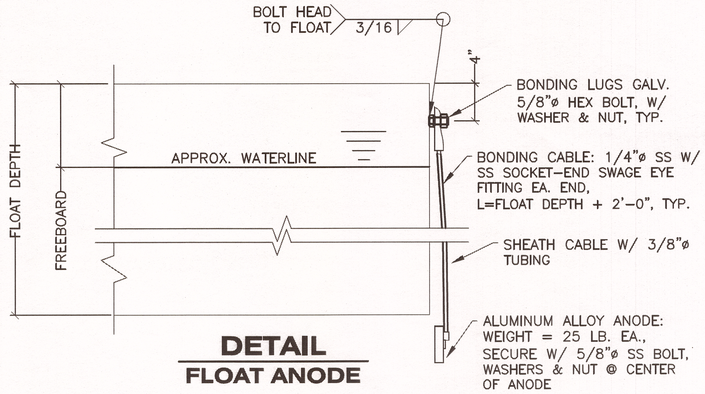

DETAIL
FLOAT ANODE

NOTES:

ACCESS HATCHES: NEW ACCESS HATCHES SHALL BE FREEMAN MARINE EQUIPMENT PART NO. 2433-0023, OR APPROVED EQUAL. HATCHES SHALL BE 15" BY 24" OVAL, CAST ALUMINUM LIFT-OFF LID WITH GALVANIZED STEEL RING. ALL HATCHES TO BE OPERATED WITH A "BI-SQUARE" SPINDLE.

BALLAST: FLOAT SYSTEM SHALL BE BALLASTED WITH POTABLE WATER TO ~2'-0" FREEBOARD ALL AROUND WITH ALL STRUCTURES INSTALLED. NOTE THAT TEMPORARY BALLAST MAY BE REQUIRED DURING ERECTION/INSTALLATION OF COMPONENTS ON THE FLOAT SYSTEM.

COAT SYSTEM: COATING SYSTEM FOR EXTERIOR OF FLOAT UNITS SHALL BE SYSTEM 1 AS NOTED ON COATING SCHEMATIC DETAIL AND PER TECHNICAL SPECIFICATIONS. APPLY EPOXY FILLER COMPOUND TO GAPS IN FLOAT LOCK ASSEMBLIES AND LIFT SHACKLE ASSEMBLY WELDMENTS PRIOR TO COATING APPLICATION. INTERIOR OF FLOATS SHALL BE UNCOATED. FLOAT ATTACHMENTS, LOCKING BARS AND ASSEMBLIES SHALL BE GALVANIZED AFTER FABRICATION.

FLOAT UNITS: FLOAT UNITS ARE FLEXIFLOAT S-70 SERIES FROM: P.O. BOX 79246
HOUSTON, TX 77279
PH: (713) 468-1706
FAX: (713) 468-5822
EMAIL: INFO@FLEXIFLOAT.COM

NOTE: ADD BARRIER CHAIN AT TOP OF FLOAT ACCESS LADDER. (3' of 1/4" gr 300 proof coil chain with snap shackle one end, and eye bolt in pipe rails at both ends) ALL HOT DIPPED GALVANIZED.

Record Drawings have been reviewed by the Project Engineer, and represent to the best of my knowledge, the project as constructed.
PE _____ Date 4/22/16

DRAWING SCALES ARE FOR FULL-SIZE SHEETS. IF NO SCALE SHOWN, USE DIMENSIONS.

DESIGNED BY: D. LOWELL
STATE OF ALASKA 49th DAVID H. LOWELL CE-12614 REGISTERED PROFESSIONAL ENGINEER
11/05/2014
CHECKED BY: STAFF
DRAWN BY: STAFF

STATE OF ALASKA
DEPARTMENT OF TRANSPORTATION & PUBLIC FACILITIES
SOUTHEAST REGION

KAKE FERRY TERMINAL IMPROVEMENTS

FLOAT

PATH: Q:\KAE\68238\PLANSET\MF\19 - FLOAT.DWG
TAB: 19 Wednesday, November 05, 2014 12:21:44 PM

REVISIONS NO.	DATE	DESCRIPTION	PROJECT DESIGNATION	YEAR	SHEET NO.	TOTAL SHEETS
			68238/0939007	2014	19	28

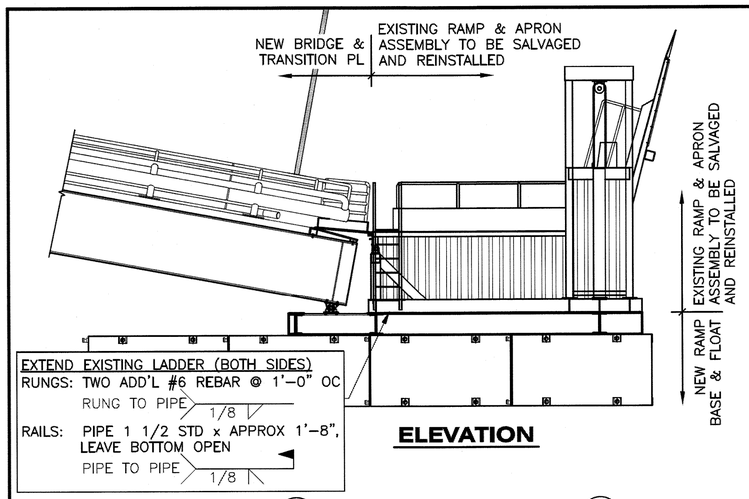

ELEVATION

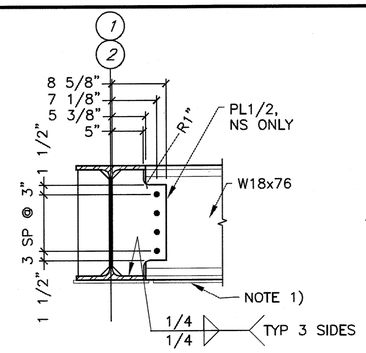

A SECTION

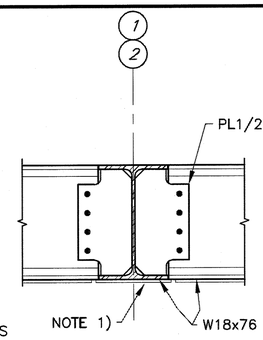

B SECTION
SINGLE-PLATE CONNECTION SIMILAR TO SECTION A

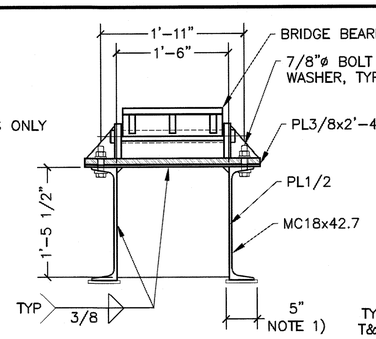

C SECTION

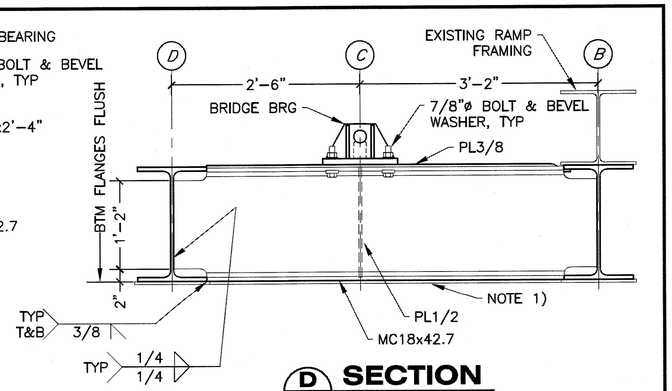

D SECTION

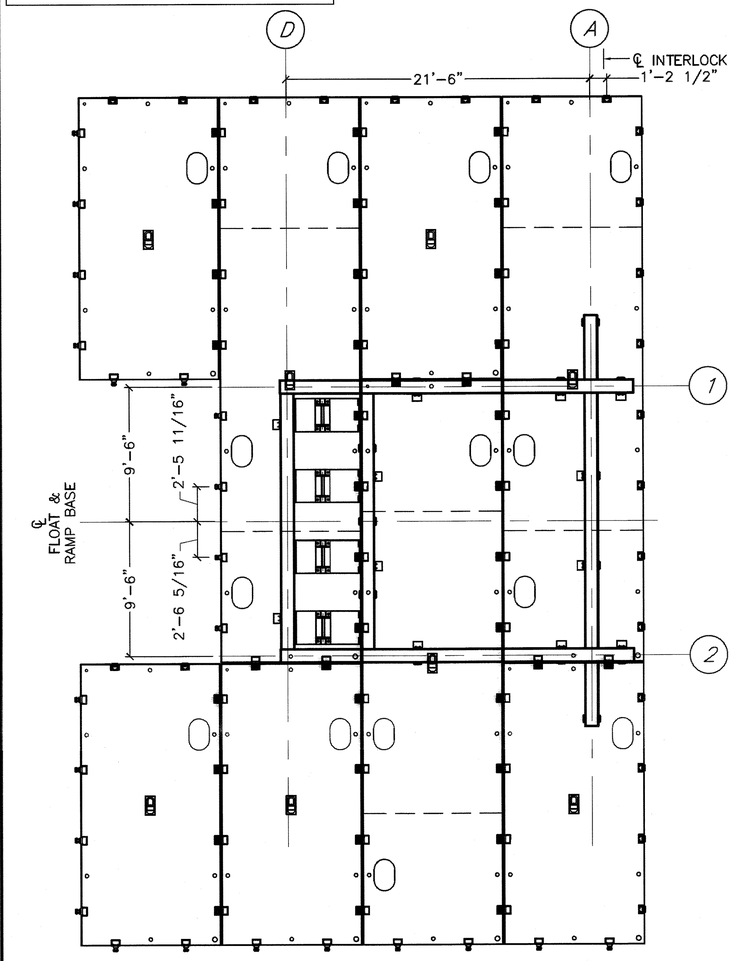

PLAN

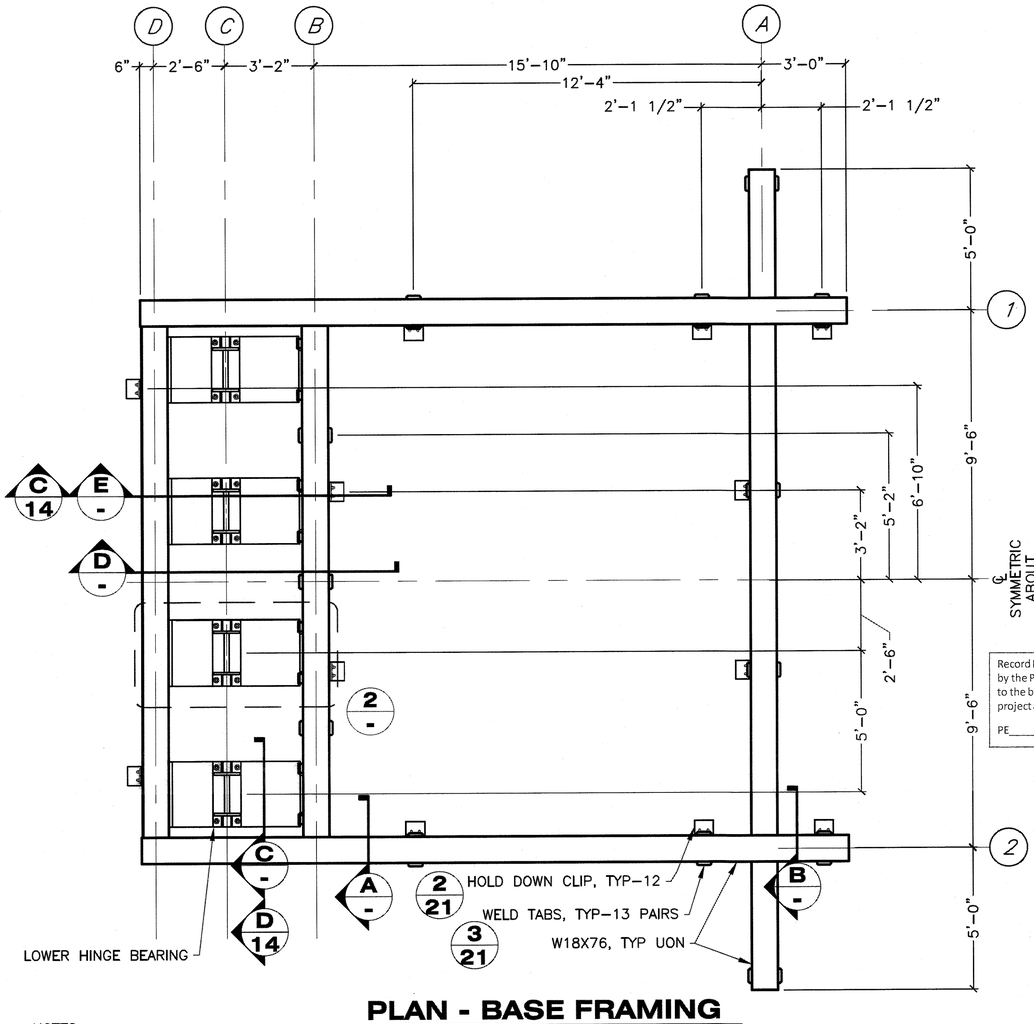

PLAN - BASE FRAMING

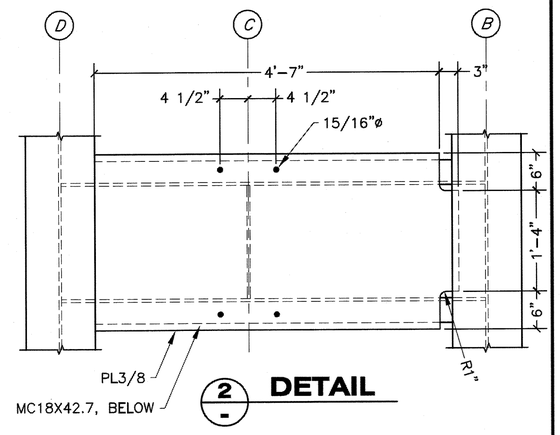

2 DETAIL

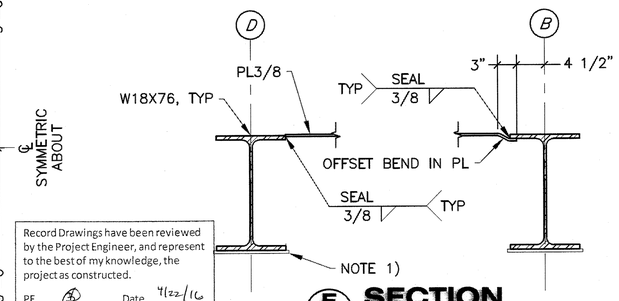

E SECTION

Record Drawings have been reviewed by the Project Engineer, and represent to the best of my knowledge, the project as constructed.
PE _____ Date 4/22/16

1/20 INTERMEDIATE RAMP BASE
FROM SHEET 11

NOTES:
1. 1/2" THICK 50 DUROMETER PLAIN ELASTOMERIC PAD FULL WIDTH OF BOTTOM FLANGES. SECURE PAD TO UNDERSIDE OF FLANGE WITH EPOXY ADHESIVE. OMIT PAD 4" EITHER SIDE OF FLOAT LOCKS & LIFT EYES
2. BOLTS ARE 3/4"ø UNLESS NOTED OTHERWISE.

DRAWING SCALES ARE FOR FULL-SIZE SHEETS. IF NO SCALE SHOWN, USE DIMENSIONS.

DESIGNED BY: T. DOGGETT	STATE OF ALASKA DEPARTMENT OF TRANSPORTATION & PUBLIC FACILITIES SOUTHEAST REGION
STATE OF ALASKA 49th TIMOTHY H. DOGGETT CE-9027 REGISTERED PROFESSIONAL ENGINEER 11/05/2014	**KAKE FERRY TERMINAL IMPROVEMENTS** **INTERMEDIATE RAMP BASE**
CHECKED BY: STAFF	
DRAWN BY: STAFF	
PATH: O:\KAE\68238\PLANSET\MF\20 - INTERMEDIATE RAMP BASE.DWG	
TAB: 20 Wednesday, November 05, 2014 12:22:21 PM	

REVISIONS NO.	DATE	DESCRIPTION	PROJECT DESIGNATION	YEAR	SHEET NO.	TOTAL SHEETS
			68238/0939007	2014	20	28

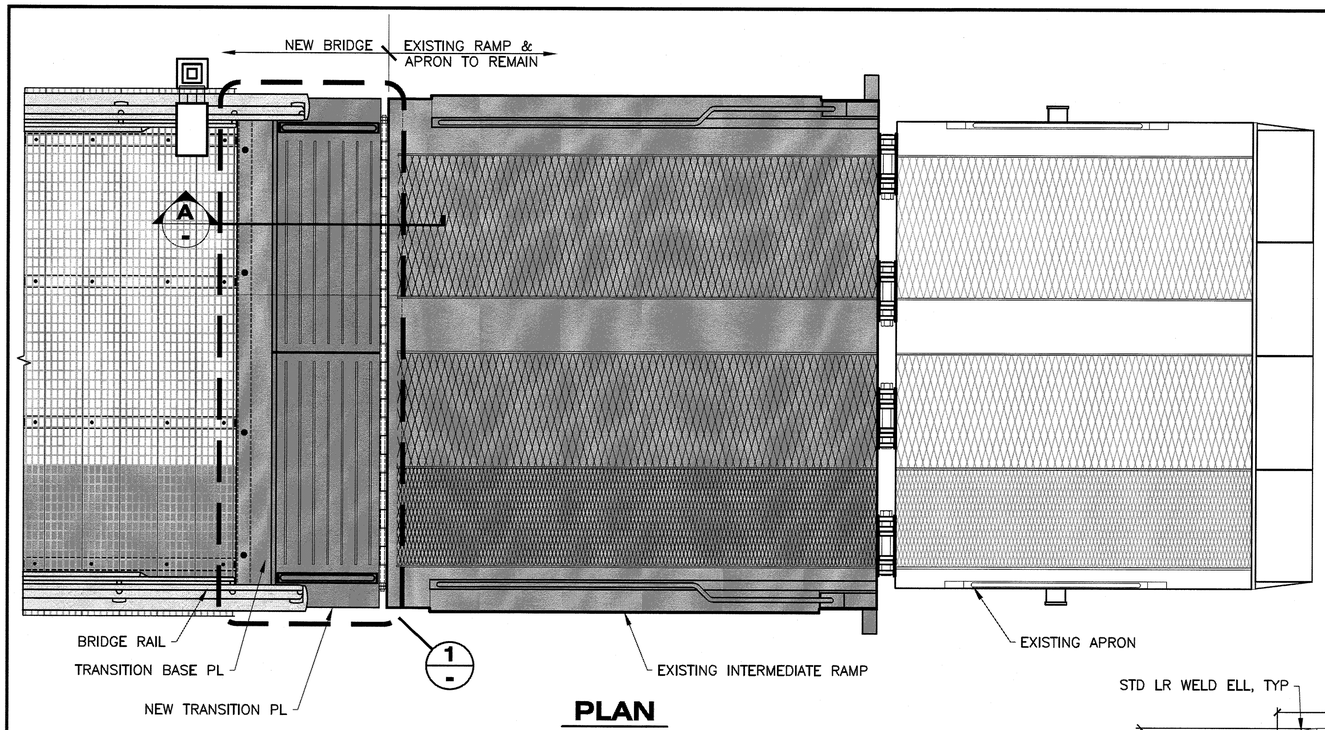

PLAN

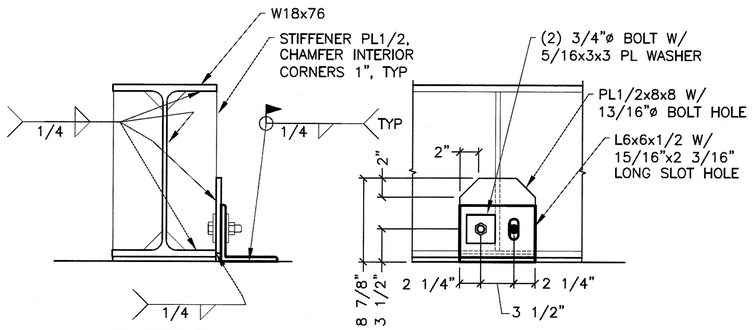

SECTION **FRONT ELEVATION**

2/21 HOLD DOWN CLIP - DETAIL

FROM SHEET 20

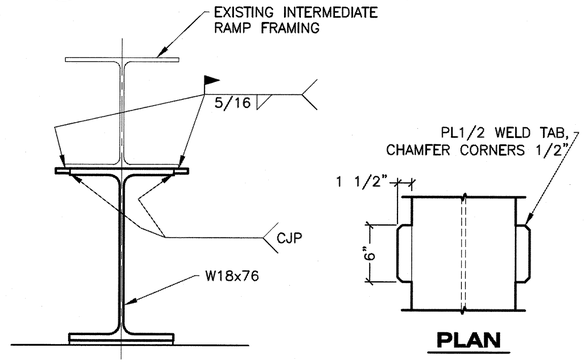

SECTION

PLAN

3/21 WELD TABS - DETAIL

FROM SHEET 20

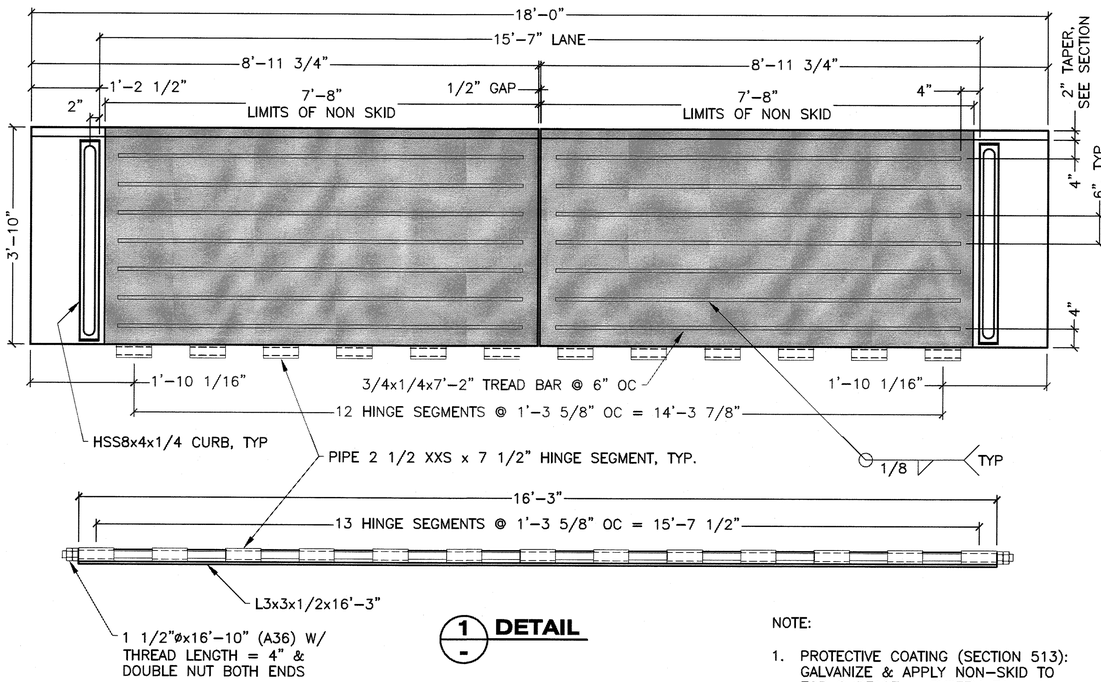

1/-1 DETAIL

1/21 TRANSITION PLATE

FROM SHEET 11

NOTE:

1. PROTECTIVE COATING (SECTION 513): GALVANIZE & APPLY NON-SKID TO TOP SURFACE – SYSTEM 7A

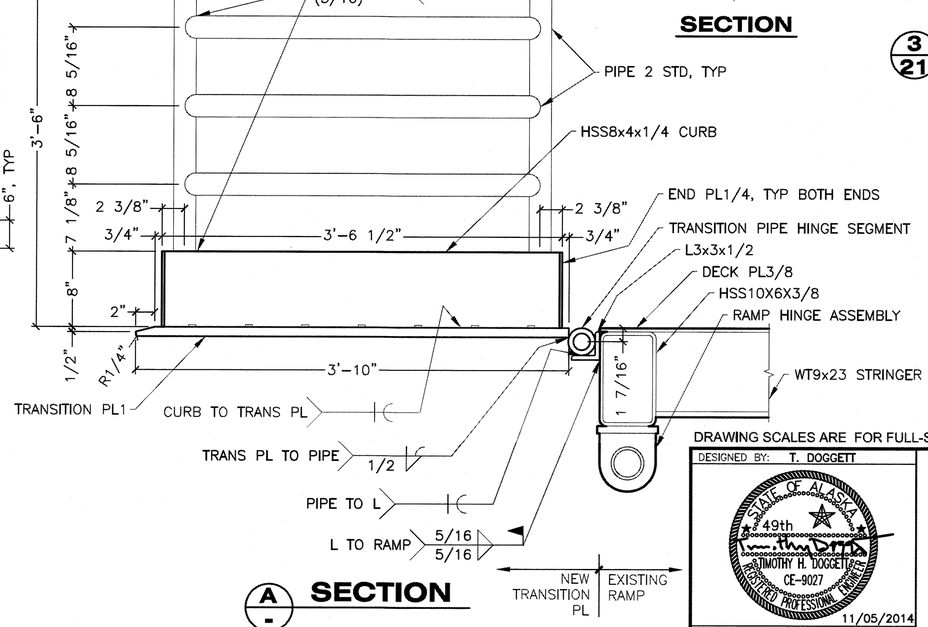

A/- SECTION

Record Drawings have been reviewed by the Project Engineer, and represent to the best of my knowledge, the project as constructed.

PE _____ Date 4/22/16

DRAWING SCALES ARE FOR FULL-SIZE SHEETS. IF NO SCALE SHOWN, USE DIMENSIONS.

DESIGNED BY: T. DOGGETT
CHECKED BY: STAFF
DRAWN BY: STAFF

STATE OF ALASKA – 49th – TIMOTHY H. DOGGETT – CE-9027 – REGISTERED PROFESSIONAL ENGINEER
11/05/2014

STATE OF ALASKA
DEPARTMENT OF TRANSPORTATION & PUBLIC FACILITIES
SOUTHEAST REGION

KAKE FERRY TERMINAL IMPROVEMENTS

SEAWARD TRANSITION PLATE

PATH: Q:\KAE\68238\PLANSET\MF\21 – SEAWARD TRANSITION PLATE.DWG
TAB: 21 Wednesday, November 05, 2014 12:22:56 PM

REVISIONS NO.	DATE	DESCRIPTION	PROJECT DESIGNATION	YEAR	SHEET NO.	TOTAL SHEETS
			68238/0939007	2014	21	28

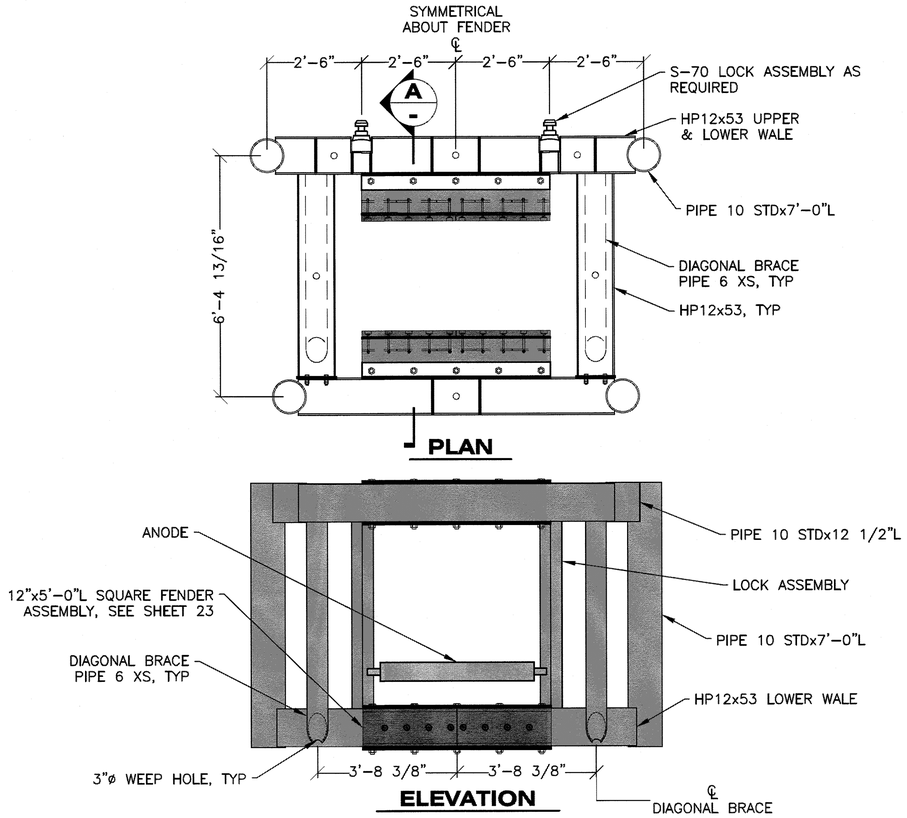

1/22 FLOAT RESTRAINT COLLAR ASSEMBLY
(1 W/ MALE LOCK & 1 W/ FEMALE LOCK)
FROM SHEETS 11 & 19

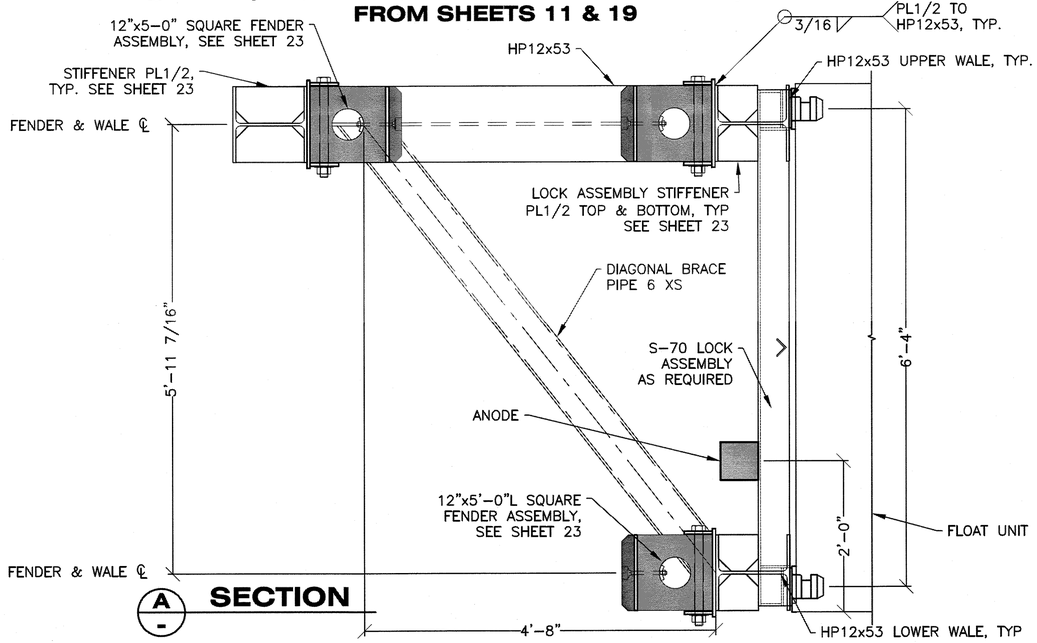

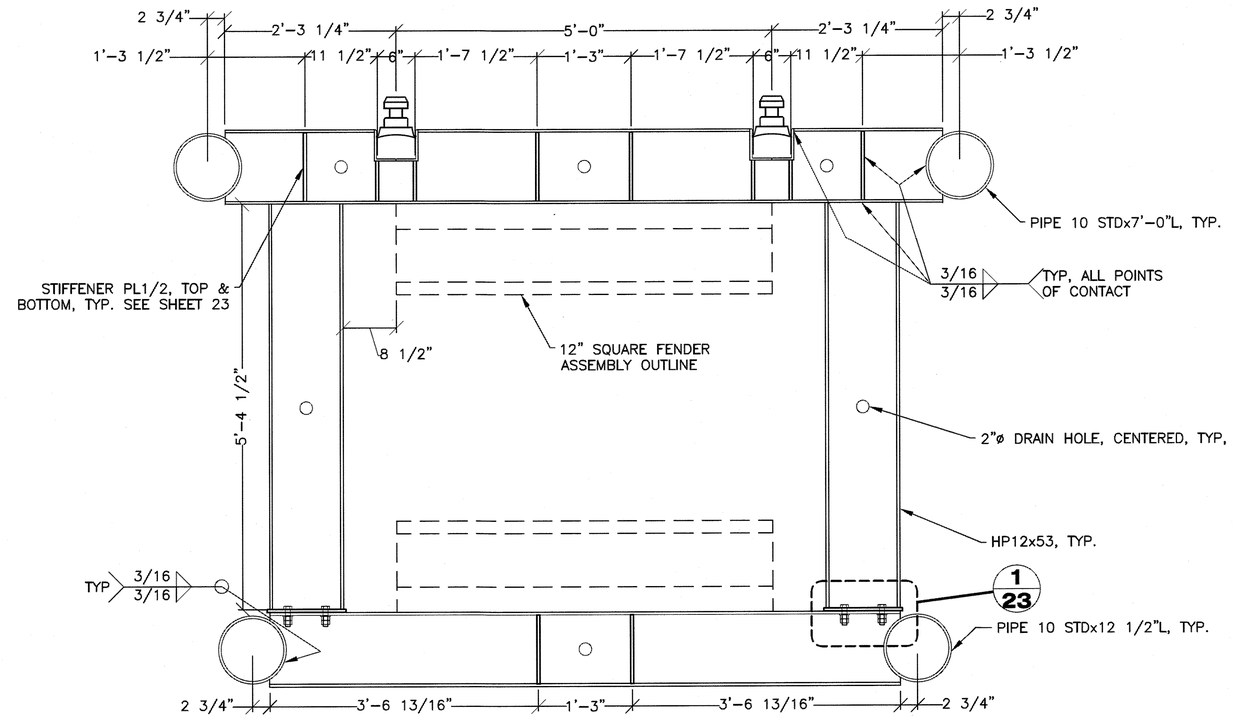

DETAIL
UPPER WALE

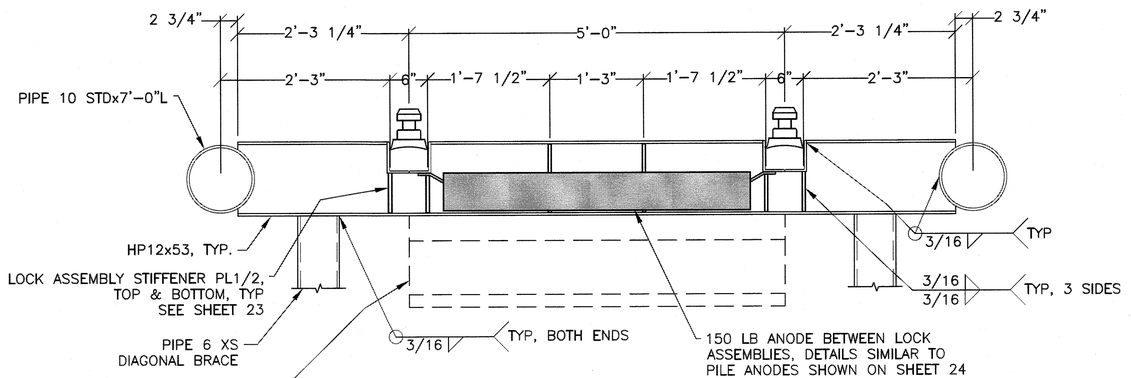

DETAIL
LOWER WALE

Record Drawings have been reviewed by the Project Engineer, and represent to the best of my knowledge, the project as constructed.
PE _____ Date 4/22/16

DRAWING SCALES ARE FOR FULL-SIZE SHEETS. IF NO SCALE SHOWN, USE DIMENSIONS.

DESIGNED BY: D. LOWELL
STATE OF ALASKA 49th DAVID H. LOWELL CE-12614 REGISTERED PROFESSIONAL ENGINEER
11/05/2014
CHECKED BY: STAFF
DRAWN BY: STAFF
PATH: O:\KAE\68238\PLANSET\MF\22-24 – FLOAT RESTRAINT COLLARS & DOLPHINS.DWG
TAB: 22 Wednesday, November 05, 2014 12:23:25 PM

STATE OF ALASKA
DEPARTMENT OF TRANSPORTATION & PUBLIC FACILITIES
SOUTHEAST REGION

KAKE FERRY TERMINAL IMPROVEMENTS

FLOAT RESTRAINT COLLARS

REVISIONS NO.	DATE	DESCRIPTION	PROJECT DESIGNATION	YEAR	SHEET NO.	TOTAL SHEETS
			68238/0939007	2014	22	28

NOTE:
HP12x53 WALE NOT SHOWN

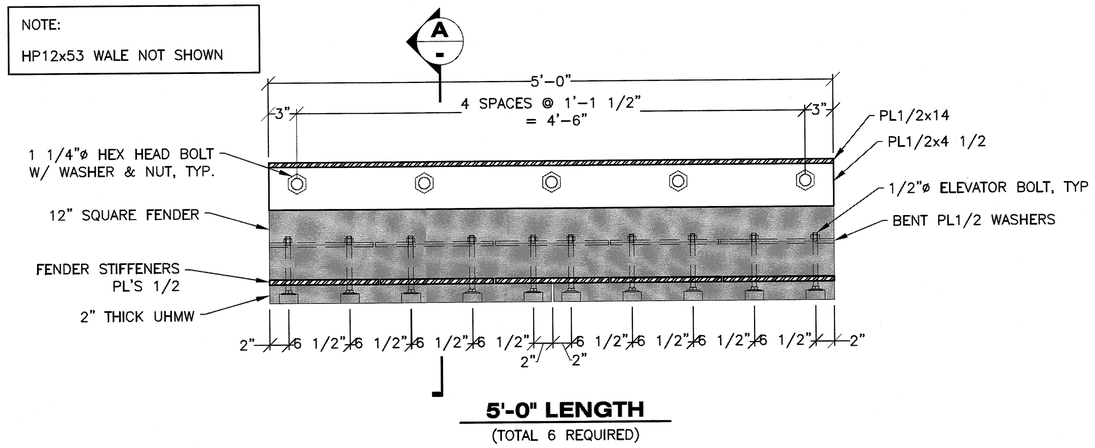

5'-0" LENGTH
(TOTAL 6 REQUIRED)

12" SQUARE FENDER ASSEMBLY PLAN

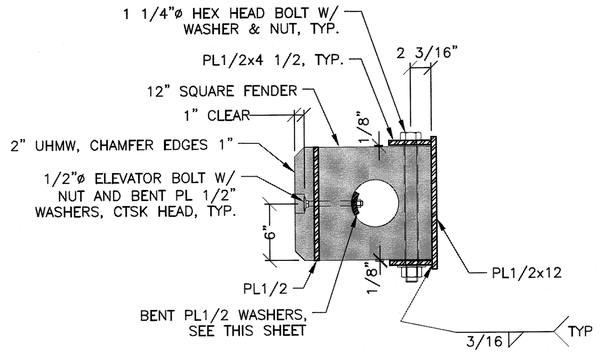

A - SECTION

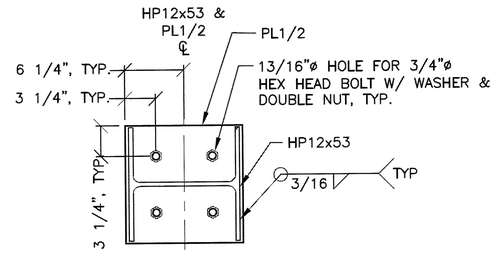

1/23 - DETAIL
CONNECTION PL1/2
FROM SHEET 22

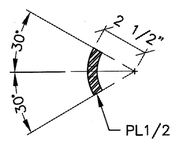

C - ELEVATION

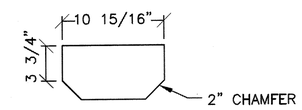

STIFFENER PL1/2

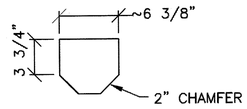

LOCK ASSEMBLY STIFFENER PL1/2

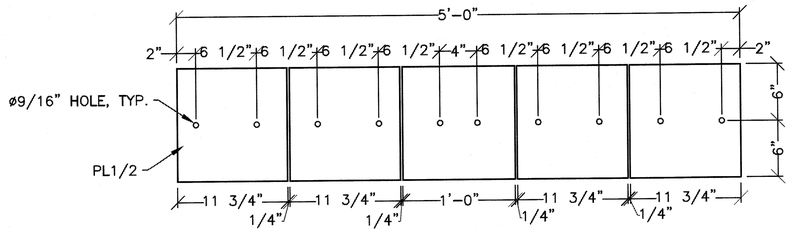

FENDER STIFFENER PL'S 1/2
5'-0" LENGTH

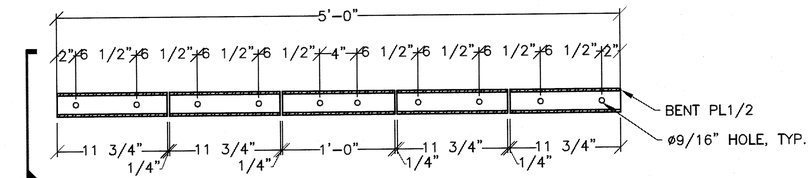

C - **BENT PL1/2 WASHERS**
5'-0" LENGTH

DRAWING SCALES ARE FOR FULL-SIZE SHEETS. IF NO SCALE SHOWN, USE DIMENSIONS.

Record Drawings have been reviewed by the Project Engineer, and represent to the best of my knowledge, the project as constructed.
PE ____ Date 4/22/16

DESIGNED BY: D. LOWELL
CHECKED BY: STAFF
DRAWN BY: STAFF
PATH: Q:\KAE\68238\PLANSET\MF\22-24 - FLOAT RESTRAINT COLLARS & DOLPHINS.DWG
TAB: 23 Wednesday, November 05, 2014 12:23:36 PM

STATE OF ALASKA
DEPARTMENT OF TRANSPORTATION
& PUBLIC FACILITIES
SOUTHEAST REGION

STATE OF ALASKA 49th DAVID H. LOWELL CE-12614 REGISTERED PROFESSIONAL ENGINEER
11/05/2014

KAKE FERRY TERMINAL IMPROVEMENTS

FLOAT RESTRAINT COLLAR DETAILS

REVISIONS NO.	DATE	DESCRIPTION	PROJECT DESIGNATION	YEAR	SHEET NO.	TOTAL SHEETS
			68238/0939007	2014	23	28

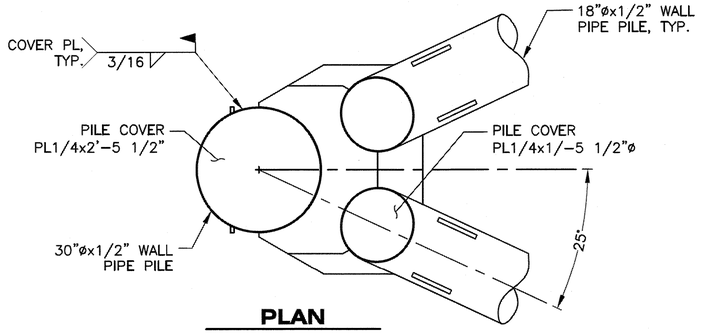

PLAN

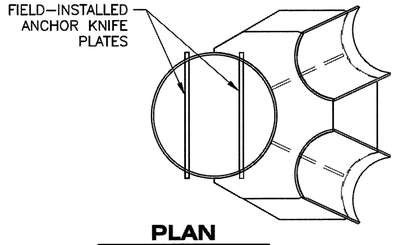

PLAN

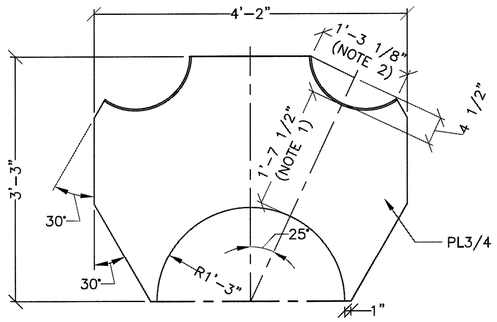

LOWER CHUTE FLANGE

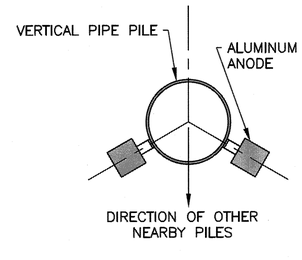

PLAN

ALL CONNECTIONS FOR CAP ASSEMBLY TO BE 3/8

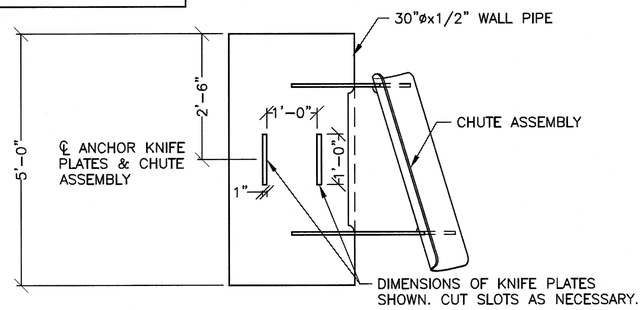

SIDE ELEVATION

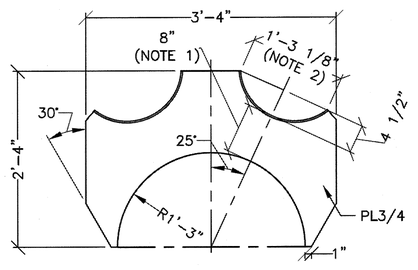

UPPER CHUTE FLANGE

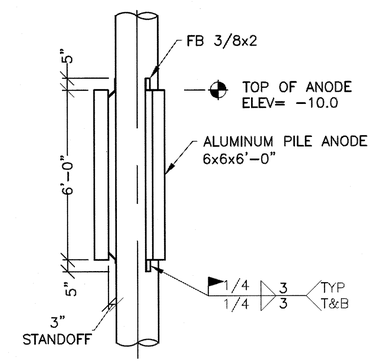

ELEVATION

PILE ANODES

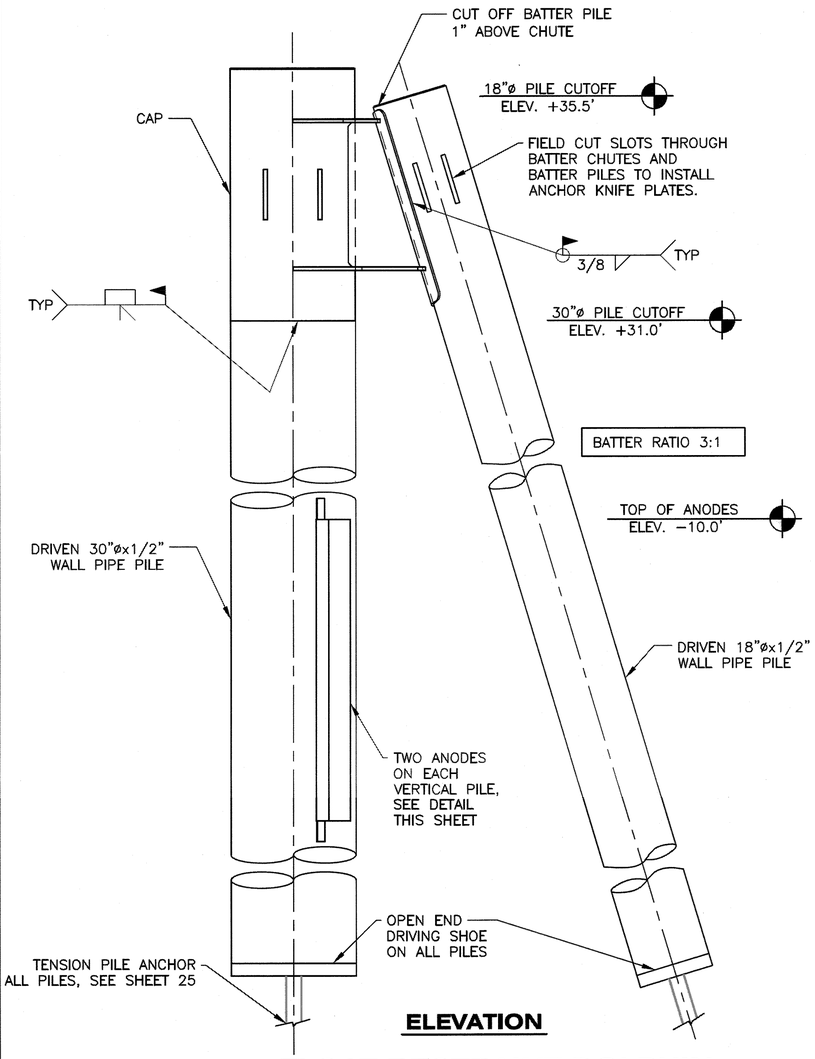

ELEVATION

1/24 FLOAT RESTRAINT DOLPHIN

FROM SHEETS 11 & 19

PLAN

A/- CHUTE ASSEMBLY

ALL CONNECTIONS FOR CHUTE ASSEMBLY TO BE 3/8

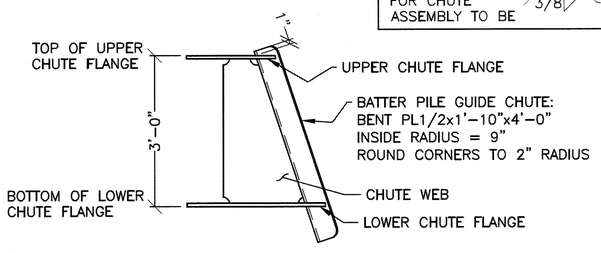

ELEVATION

A/- CHUTE ASSEMBLY

CHUTE WEB

NOTES:

1. DIMENSION ON TOP SIDE OF PL
2. APPROXIMATE DIMENSIONS SHOWN, CUT AND BEVEL ELLIPSE TO FIT BATTER CHUTE, TYP.

DRAWING SCALES ARE FOR FULL-SIZE SHEETS. IF NO SCALE SHOWN, USE DIMENSIONS.

Record Drawings have been reviewed by the Project Engineer, and represent to the best of my knowledge, the project as constructed.
PE _____ Date 4/22/16

DESIGNED BY: D. LOWELL
DRAWN BY: STAFF
CHECKED BY: STAFF
11/05/2014

STATE OF ALASKA
DEPARTMENT OF TRANSPORTATION & PUBLIC FACILITIES
SOUTHEAST REGION

KAKE FERRY TERMINAL IMPROVEMENTS

FLOAT RESTRAINT DOLPHINS

PATH: Q:\KAE\68238\PLANSET\MF\22-24 - FLOAT RESTRAINT COLLARS & DOLPHINS.DWG
TAB: 24 Wednesday, November 05, 2014 12:23:49 PM

REVISIONS NO.	DATE	DESCRIPTION	PROJECT DESIGNATION	YEAR	SHEET NO.	TOTAL SHEETS
			68238/0939007	2014	24	28

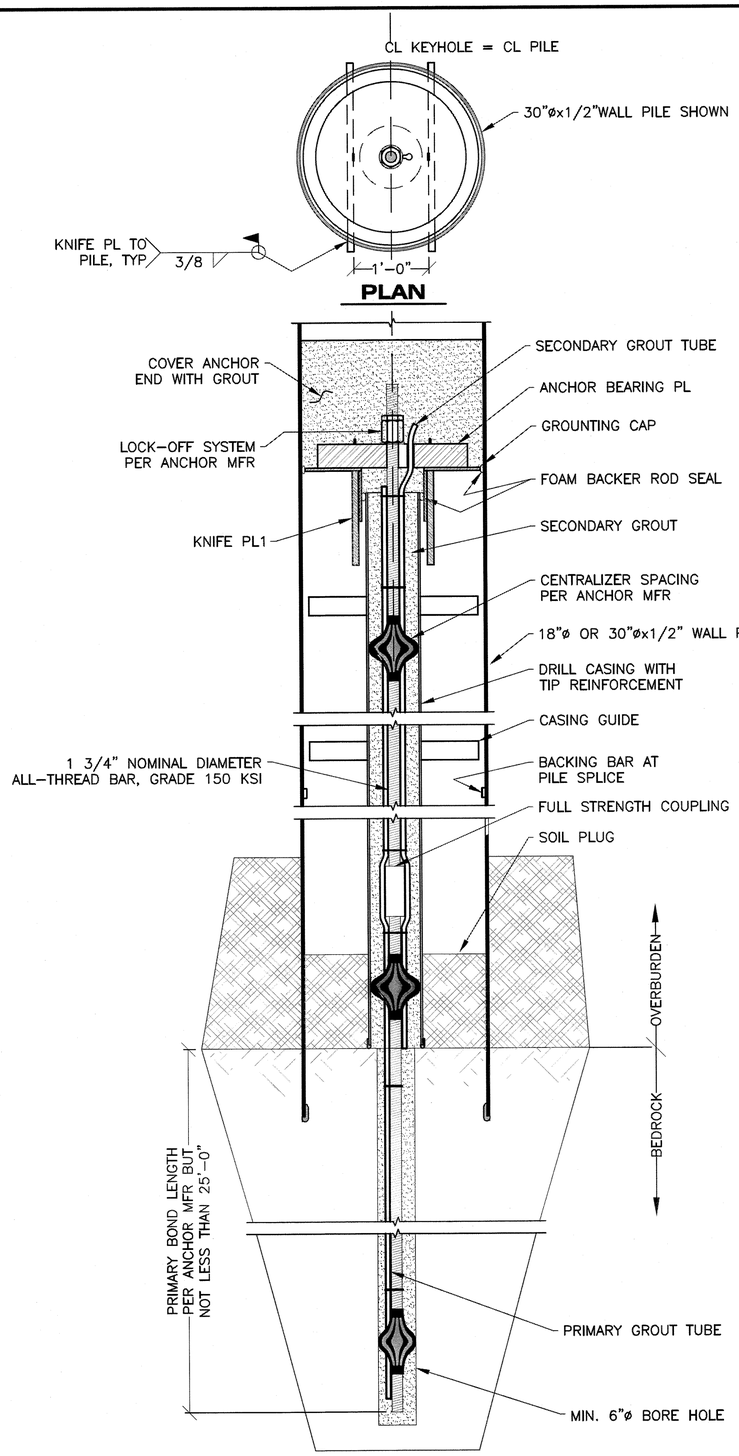

TYPICAL SECTION
TENSION PILE ANCHOR

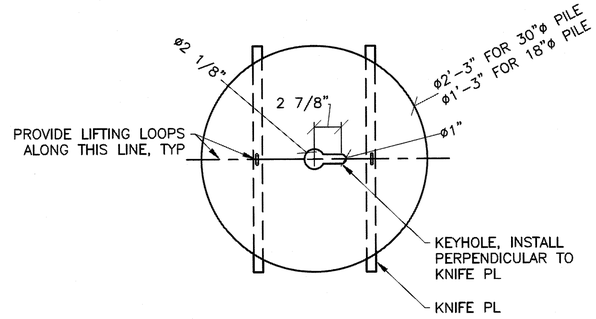

ANCHOR BEARING PL
PL3

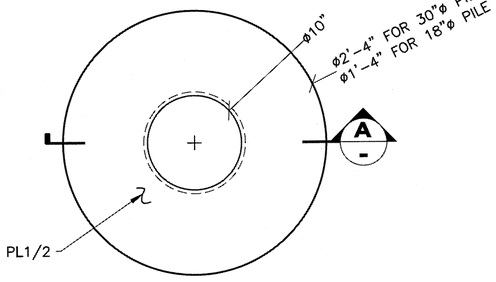

PLAN

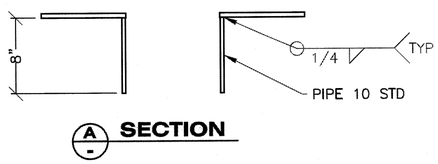

A - SECTION

GROUTING CAP

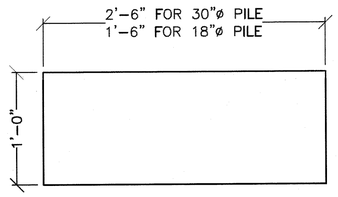

ANCHOR KNIFE PLATE
PL1

Record Drawings have been reviewed by the Project Engineer, and represent to the best of my knowledge, the project as constructed.

PE _____ Date 4/22/16

TENSION ANCHOR NOTES:

GENERAL

1) REFER TO SECTION 518 OF THE SPECIAL PROVISIONS FOR ADDITIONAL TENSION PILE REQUIREMENTS.

2) ANCHORING DETAILS AND METHODS SHOWN ARE A SUGGESTED PROCEDURE. METHODS OR MATERIALS MAY BE MODIFIED AT THE REQUEST OF THE CONTRACTOR – IF APPROVED BY THE ENGINEER IN ADVANCE OF CONSTRUCTION.

MATERIALS & SPECIFICATIONS

1) ANCHOR RODS SHALL BE ALL-THREAD BAR PER ASTM A-722 & ASTM A-615, GRADE 150 KSI. COUPLINGS SHALL BE CAPABLE OF DEVELOPING THE FULL TENSILE STRENGTH OF THE BAR. ANCHOR RODS SHALL BE EQUIPPED WITH POLYETHYLENE CENTRALIZERS TO ENSURE THE ANCHOR ROD IS CENTERED IN THE CASING AND DRILLED HOLE.

2) STEEL ANCHOR BEARING AND KNIFE PLATES SHALL BE ASTM A572, GRADE 50.

3) PRIMARY AND SECONDARY GROUT MIXTURES SHALL BE DESIGNED BY THE CONTRACTOR IN ACCORDANCE WITH RECOMMENDATIONS PROVIDED BY THE ANCHOR ROD SYSTEM MANUFACTURER. SUBMIT GROUT MIXTURE DESIGNS TO THE ENGINEER FOR APPROVAL PRIOR TO START OF WORK. ALTERNATELY CONTRACTOR MAY USE PRE-MIXED, PRE-PACKAGED GROUT.

4) PRIMARY AND SECONDARY GROUT TUBE SYSTEMS SHALL BE DESIGNED BY THE CONTRACTOR IN ACCORDANCE WITH THE ANCHOR ROD MANUFACTURERS RECOMMENDATIONS FOR THE SELECTED GROUT MIXTURE AND GROUT PUMP.

SUGGESTED INSTALLATION PROCEDURE

1) DRIVE PILES TO PRACTICAL REFUSAL AND SEAT ALL PILES INTO COMPETENT BEDROCK. AFFIX CAP TO PILES.

2) DRIVE CASING TO SURFACE OF BEDROCK.

3) DRILL THROUGH CASING AND INTO BEDROCK TO THE APPROVED DEPTH. CLEAN HOLE BY FLUSHING WITH WATER AND AIR.

4) INSTALL KNIFE PLATE SUPPORTS AND GROUTING CAP.

5) PLACE ANCHOR ROD WITH PRIMARY AND SECONDARY GROUT TUBES ATTACHED INTO CASING/DRILLED HOLE.

6) INJECT PRIMARY GROUT FROM THE BOTTOM OF THE HOLE TO THE TOP TO ENSURE COMPLETE COVERAGE. GROUT TUBE SHALL REMAIN FIXED TO THE ANCHOR AND NOT WITHDRAWN DURING GROUTING. MEASURE GROUT VOLUME TO ENSURE ANCHOR IS COVERED FOR THE DESIGN PRIMARY BOND LENGTH. ALLOW GROUT TO CURE UNDISTURBED TO THE SPECIFIED TEST STRENGTH.

7) PLACE ANCHOR BEARING PLATE AND CONDUCT PERFORMANCE OR PROOF TESTS IN ACCORDANCE WITH SECTION 518 OF THE SPECIAL PROVISIONS. THE TEST LOAD USED IN THE TEST PROCEDURE SHALL BE THE ULTIMATE UPLIFT CAPACITY SHOWN IN THE PILE DATA TABLE. AT THE COMPLETION OF TESTING, REDUCE TENSION TO THE LOCK-OFF LOAD AND TRANSFER LOAD TO THE BEARING PLATE BY TIGHTENING THE NUT. THE LOCK-OFF LOAD SHALL BE TAKEN AS 0.60 OF THE ULTIMATE UPLIFT CAPACITY SHOWN IN THE PILE DATA TABLE.

8) AFTER ANCHOR HAS BEEN ACCEPTED BY THE ENGINEER, PLACE SECONDARY GROUT AND ANCHORAGE GROUT OR CONCRETE COVER.

DRAWING SCALES ARE FOR FULL-SIZE SHEETS. IF NO SCALE SHOWN, USE DIMENSIONS.

DESIGNED BY: D. LOWELL
DRAWN BY: STAFF
CHECKED BY: STAFF

STATE OF ALASKA
DAVID H. LOWELL
CE-12614
49th
REGISTERED PROFESSIONAL ENGINEER
11/05/2014

PATH: Q:\KAE\68238\PLANSET\MF\25 – PILE ANCHORS.DWG
TAB: 25 Wednesday, November 05, 2014 12:24:14 PM

STATE OF ALASKA
DEPARTMENT OF TRANSPORTATION & PUBLIC FACILITIES
SOUTHEAST REGION

KAKE FERRY TERMINAL IMPROVEMENTS

PILE ANCHORS

REVISIONS NO.	DATE	DESCRIPTION	PROJECT DESIGNATION	YEAR	SHEET NO.	TOTAL SHEETS
			68238/0939007	2014	25	28

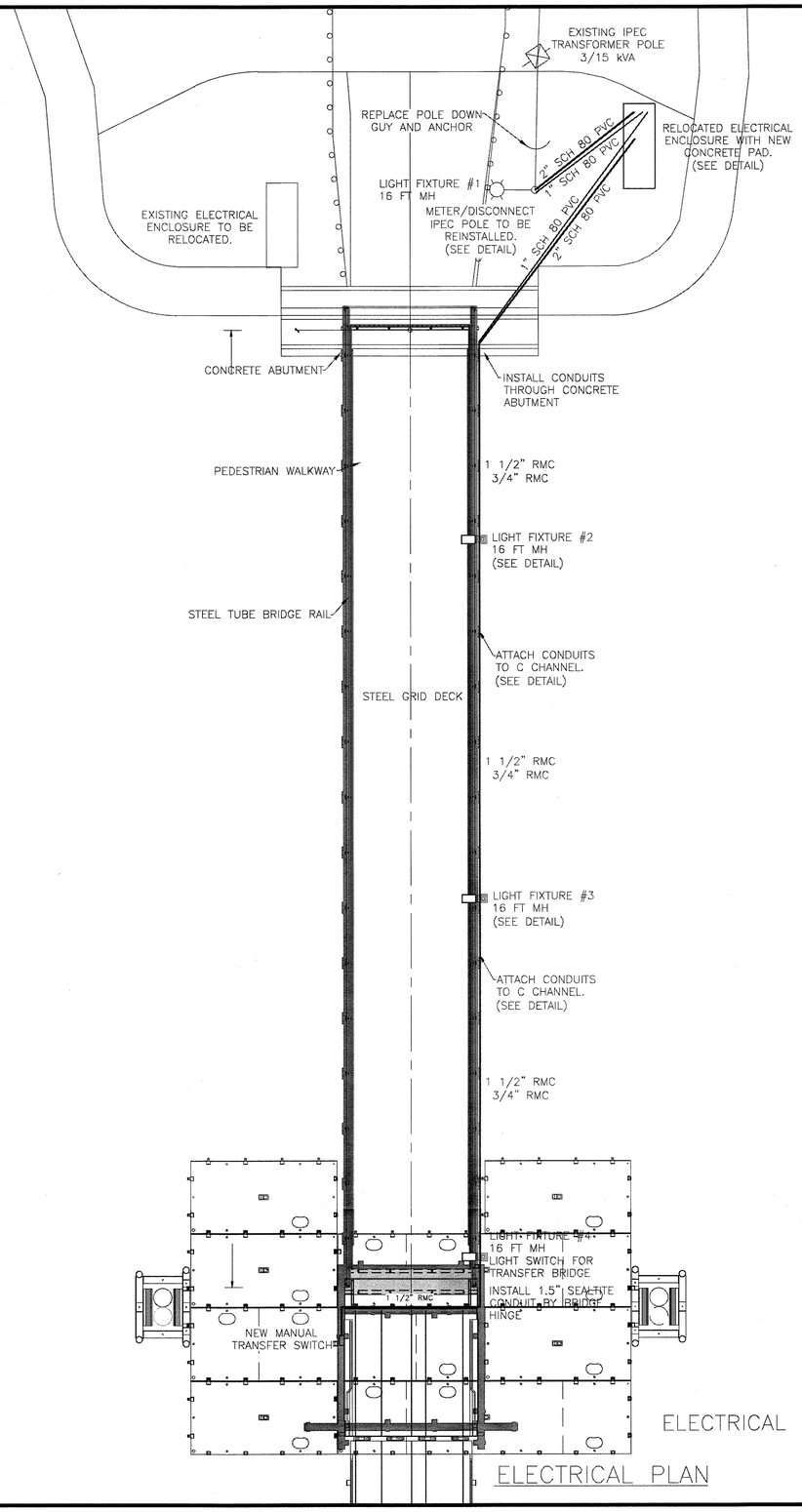

ELECTRICAL PLAN

ELECTRICAL PLAN

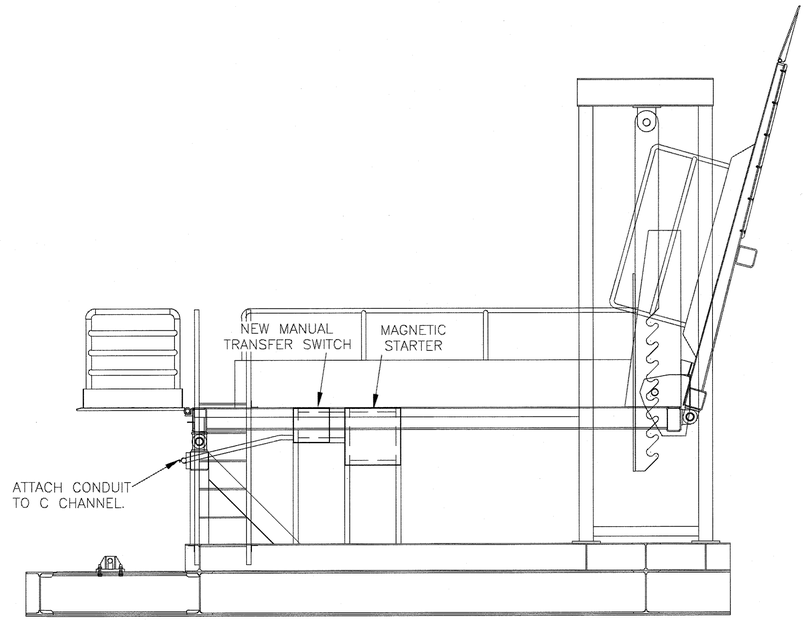

ELECTRICAL ELEVATION

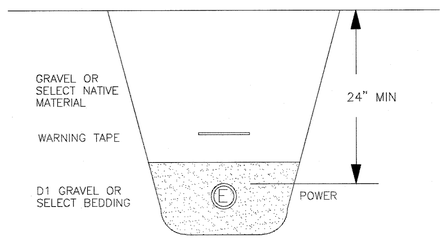

TRENCH DETAIL

DO NOT SCALE FROM THESE DRAWINGS USE DIMENSIONS

Record Drawings have been reviewed by the Project Engineer, and represent to the best of my knowledge, the project as constructed.

PE _____ Date 4/22/15

CHECKED BY: FMC

STATE OF ALASKA
49th
Frank Michael Carroll
EE-5604
REGISTERED PROFESSIONAL ENGINEER

DESIGNED BY: FMC

DRAWN BY: FMC

STATE OF ALASKA
DEPARTMENT OF TRANSPORTATION & PUBLIC FACILITIES
SOUTHEAST REGION

KAKE FERRY TERMINAL IMPROVEMENTS

ELECTRICAL PLANS

PATH: C:\USERS\MIKE\DOCUMENTS\KAKE FERRY TERMINAL\KAKE ELECTRICAL DRAWINGS\68238 KAKE ELECTRICAL PLAN.DV
TAB: 26 Wednesday, September 03, 2014 1:10:32 PM MIKE

REVISIONS			PROJECT DESIGNATION	YEAR	SHEET NO.	TOTAL SHEETS
NO.	DATE	DESCRIPTION				
			68238/0939007	2014	26	28

BRIDGE LIGHT POLE DETAIL

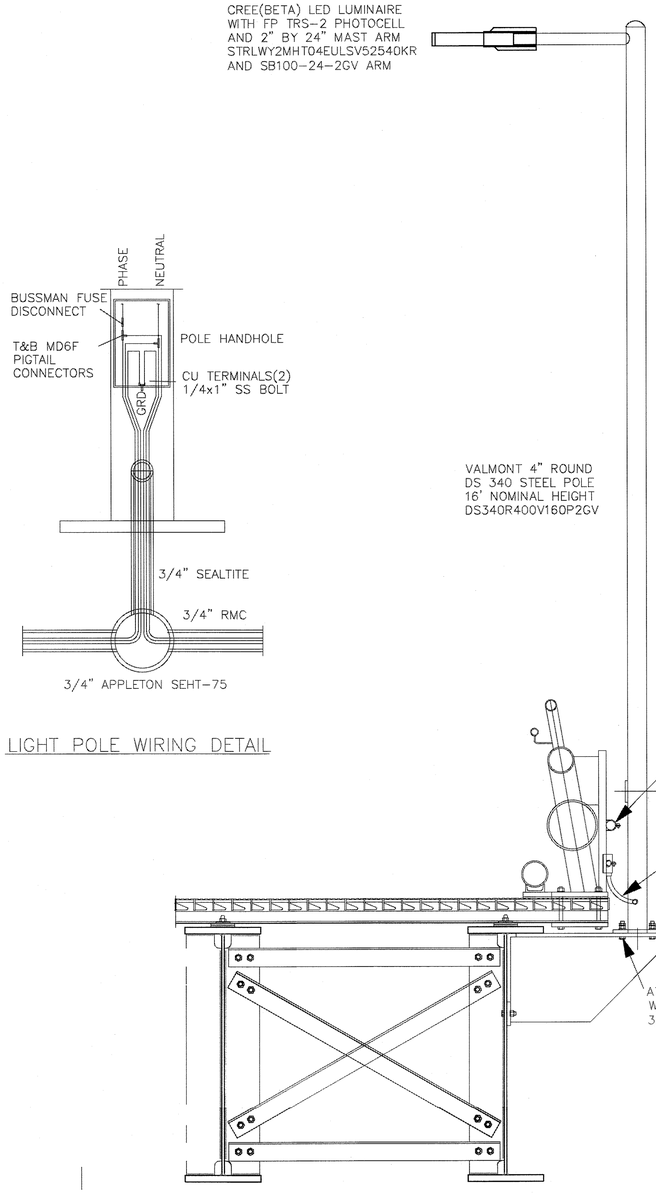

LIGHT POLE WIRING DETAIL

METER-LIGHT POLE DETAIL

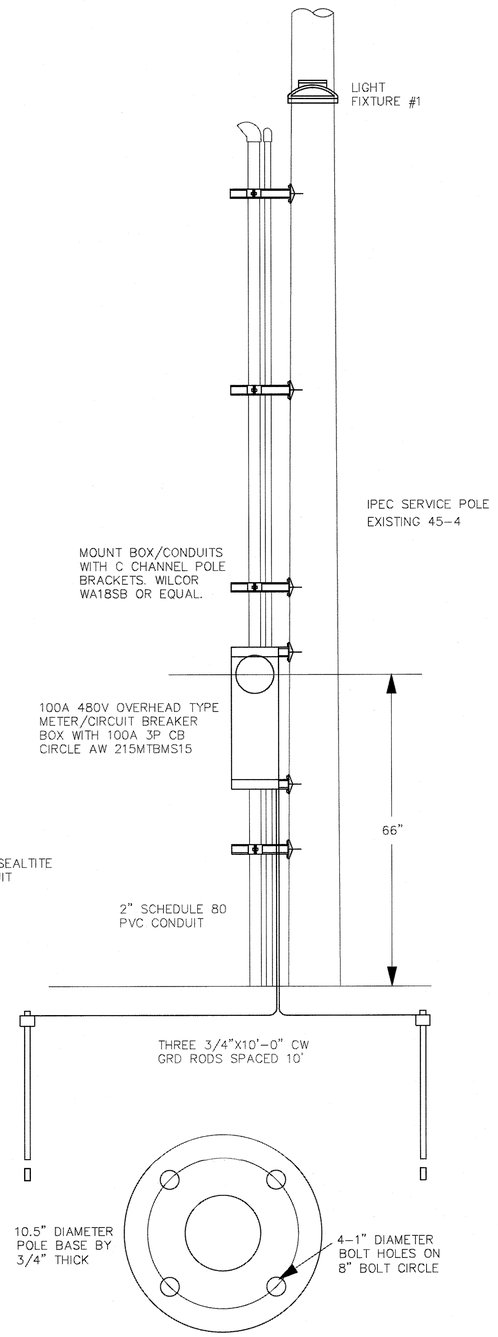

LIGHT POLE BASE DETAIL

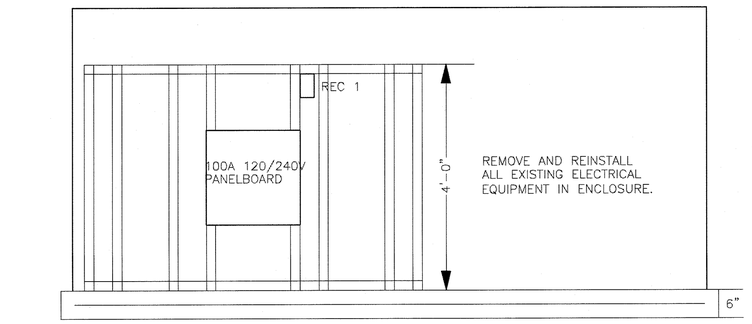

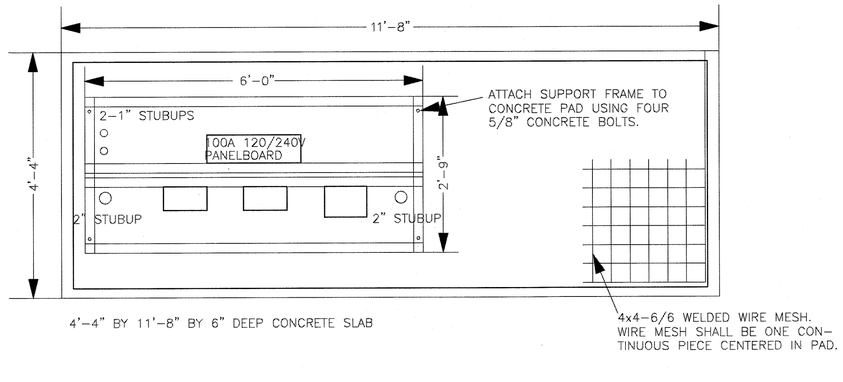

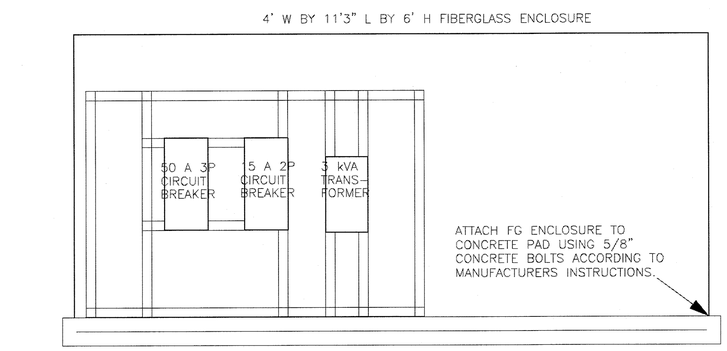

FG ELECTRICAL ENCLOSURE DETAIL

DO NOT SCALE FROM THESE DRAWINGS USE DIMENSIONS

Record Drawings have been reviewed by the Project Engineer, and represent to the best of my knowledge, the project as constructed.

PE _____ Date 4/22/16

CHECKED BY: FMC

STATE OF ALASKA
49th
Frank Michael Carsten
EE-5604
REGISTERED PROFESSIONAL ENGINEER

DESIGNED BY: FMC

DRAWN BY: FMC

PATH: C:\USERS\MIKE\DOCUMENTS\KAKE FERRY TERMINAL\KAKE ELECTRICAL DRAWINGS\68238 KAKE ELECTRICAL DETAILS

TAB: 27 Friday, September 05, 2014 10:06:07 AM MIKE

STATE OF ALASKA
DEPARTMENT OF TRANSPORTATION
& PUBLIC FACILITIES
SOUTHEAST REGION

KAKE FERRY TERMINAL IMPROVEMENTS

ELECTRICAL PLANS

REVISIONS			PROJECT DESIGNATION	YEAR	SHEET NO.	TOTAL SHEETS
NO.	DATE	DESCRIPTION				
			68238/0939007	2014	27	28

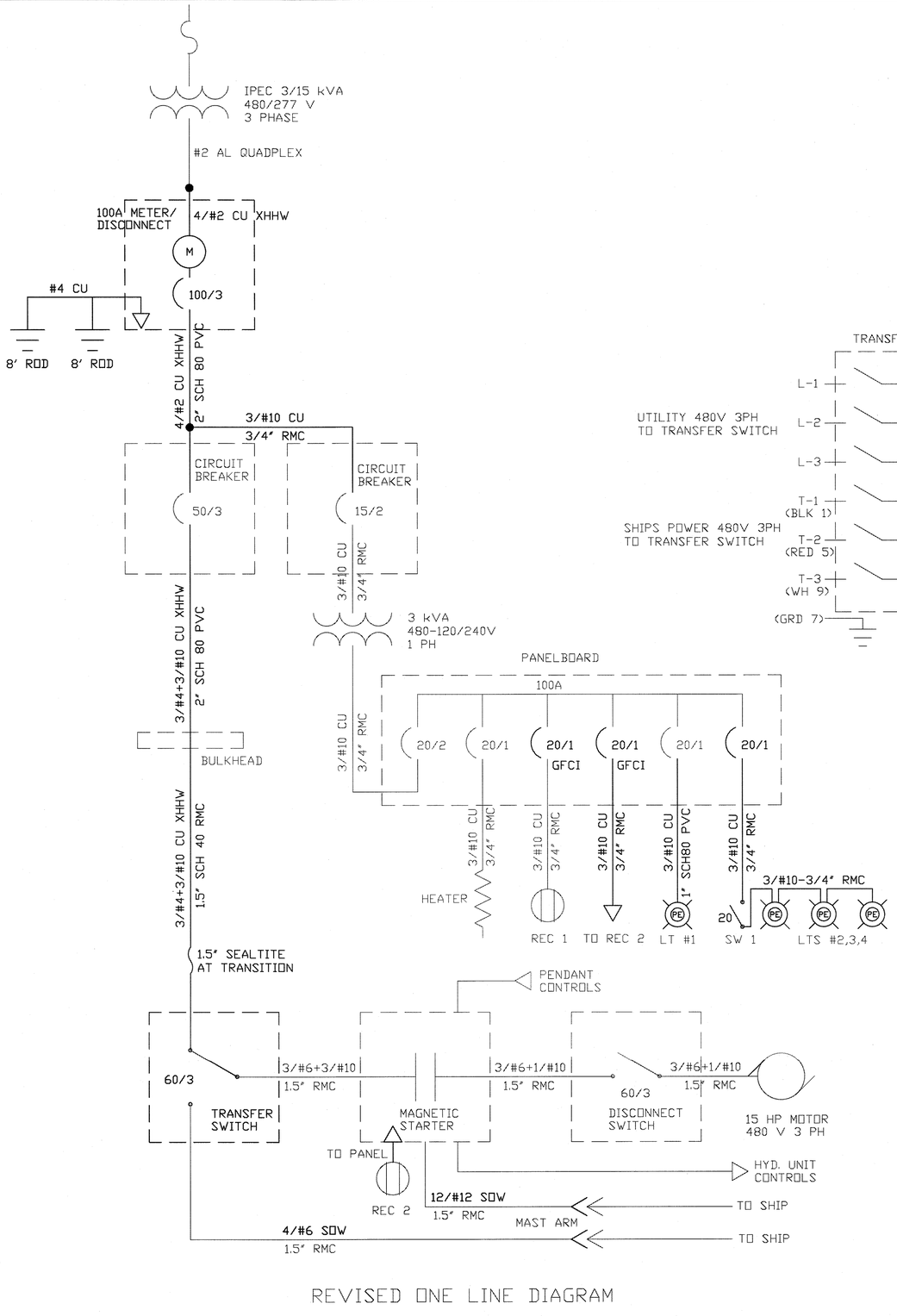

REVISED ONE LINE DIAGRAM

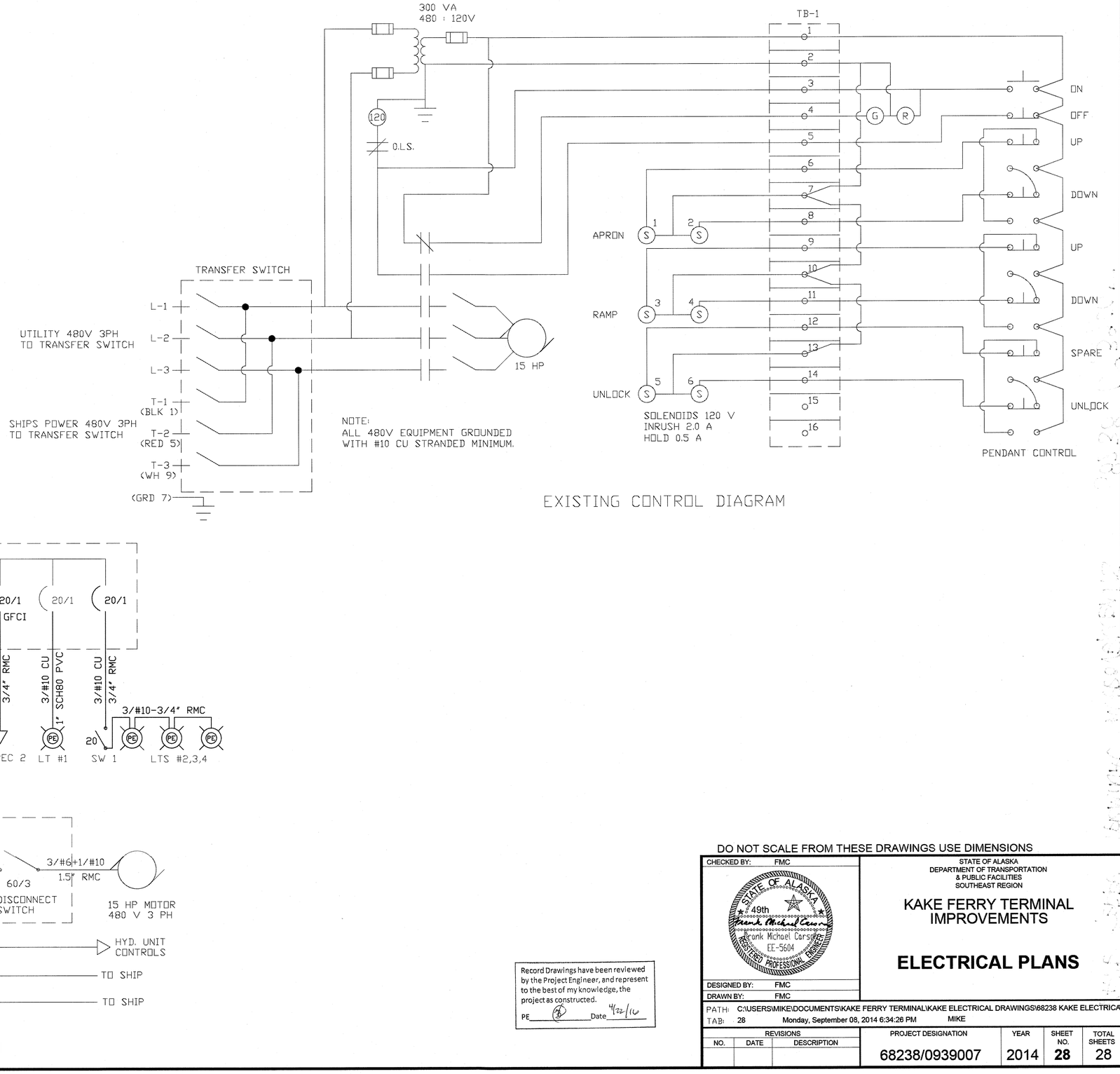

EXISTING CONTROL DIAGRAM

DO NOT SCALE FROM THESE DRAWINGS USE DIMENSIONS

Record Drawings have been reviewed by the Project Engineer, and represent to the best of my knowledge, the project as constructed.
PE _____ Date 4/22/14

CHECKED BY: FMC
DESIGNED BY: FMC
DRAWN BY: FMC

STATE OF ALASKA
Frank Michael Carsner
EE-5604
REGISTERED PROFESSIONAL ENGINEER

STATE OF ALASKA
DEPARTMENT OF TRANSPORTATION
& PUBLIC FACILITIES
SOUTHEAST REGION

KAKE FERRY TERMINAL IMPROVEMENTS

ELECTRICAL PLANS

PATH: C:\USERS\MIKE\DOCUMENTS\KAKE FERRY TERMINAL\KAKE ELECTRICAL DRAWINGS\68238 KAKE ELECTRICAL ONE LINE
TAB: 28 Monday, September 08, 2014 6:34:26 PM MIKE

REVISIONS		
NO.	DATE	DESCRIPTION

PROJECT DESIGNATION	YEAR	SHEET NO.	TOTAL SHEETS
68238/0939007	2014	28	28